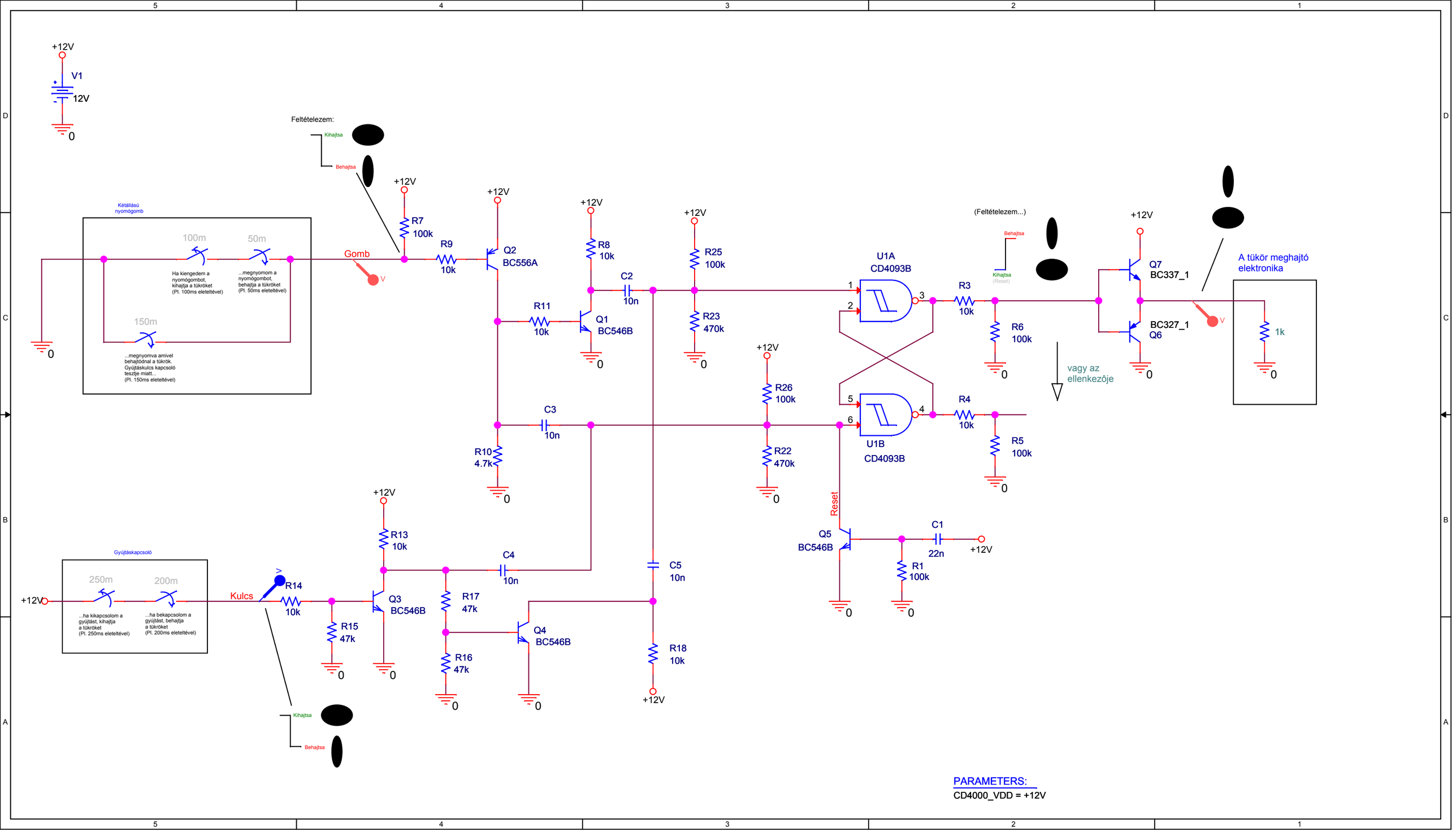

PARAMETERS:

CD4000_VDD = +12V