SCHEMATIC, AMPLIFIER CHANNEL, MX3000a
REV K, 10-14-92, FOR PC-004200-00 REV E

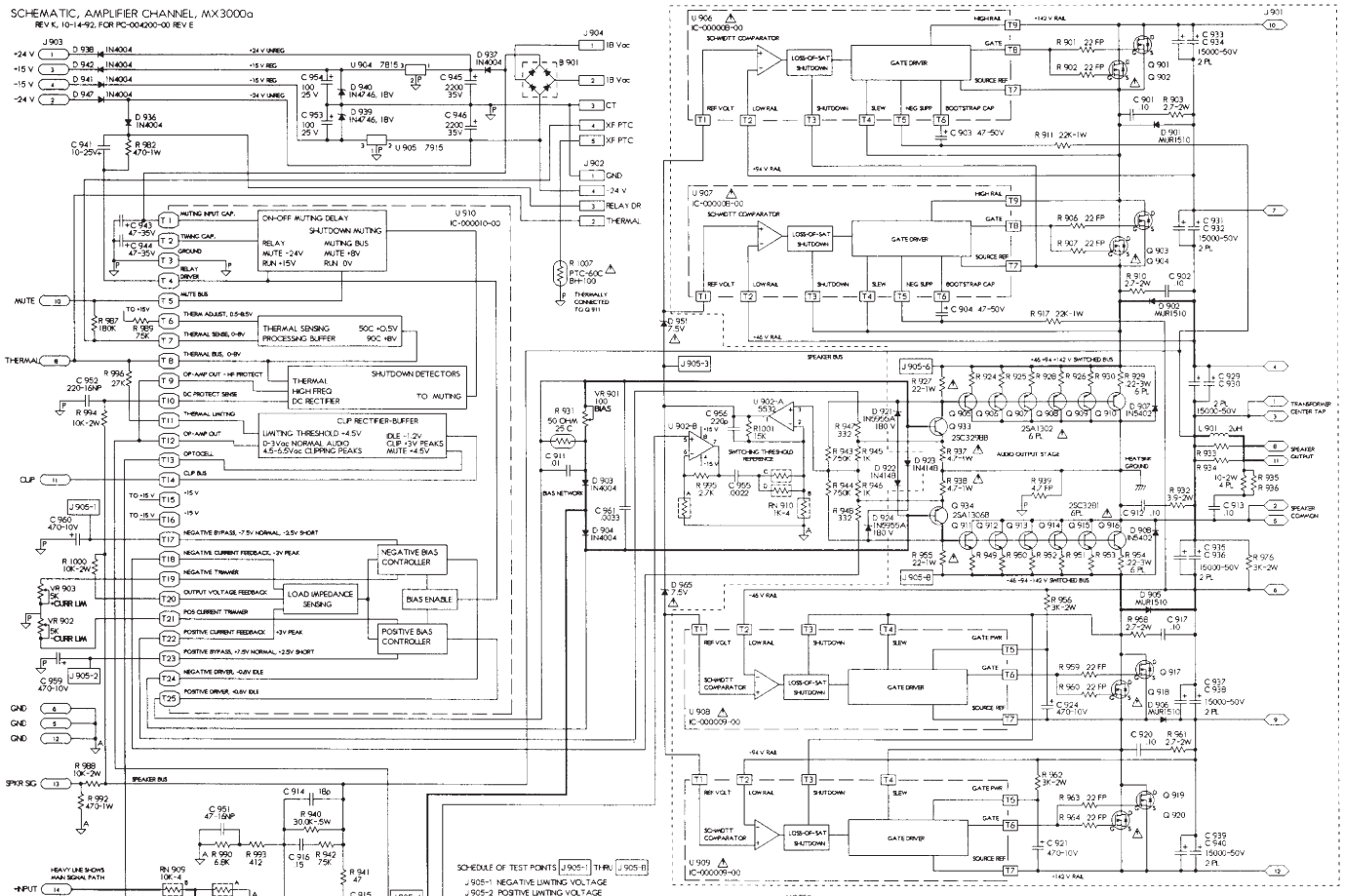

SCHEDULE OF TEST POINTS J905-1 THRU J905-8

- J 905-1 NEGATIVE LIMITING VOLTAGE
- J 905-2 POSITIVE LIMITING VOLTAGE
- J 905-3 SWITCHING THRESHOLD REFERENCE VOLTAGE
- J 905-4 AMPLIFIER LOOP OPAMP OUTPUT
- J 905-5 SWITCHED POS AMPLIFIER RAIL--HIGH VOLTAGE
- J 905-6 SWITCHED NEG AMPLIFIER RAIL--HIGH VOLTAGE

PART NUMBERING SCHEDULE FOR PCBS USED IN MX3000a

PCB NUMBER	DESCRIPTION	CH 1 PARTS	CH 2 PARTS	PARTS IN COMMON
PC-004001-00	DISPLAY PCB	101-199	201-299	1-29
PC-004002-00	INPUT PCB	301-399	401-499	31-49
PC-004003-00	AC PCB	501-599	601-699	51-69
PC-004004-00	SPKR PCB	701-799	801-899	71-99
PC-004200-00	AMP CHANNEL 901-JP (SAME BOARD FOR CH 1, CH2)			

NOTES.

1. ALL RESISTORS 1/4 WATT, 5% UNLESS NOTED.
2. ALL CAPACITORS 100V UNLESS NOTED. TOLERANCE 20% FOR ELECTROLYTIC TYPES, 10% ON OTHER TYPES.
3. BRIDGE RECTIFIER B 901, 1.5A, 100V.
4. ⚠ R 1007 IS POSITIVE TEMPERATURE COEFFICIENT RESISTOR MOUNTED TO HEAT SINK. RESISTANCE 100 OHM COLD, RISING AT 55 C. QSC P/N RE-000006-PT
5. ⚠ Q 901-904, 917-920 ARE SWITCHING FETS. QSC P/N QD-000013-QD OR QD-000031-QD. 125 W, 60 V MINIMUM, ON-RESISTANCE 0.030 OHMS MAX.
6. ⚠ ZENERS D 951, 965 MARKED 7.5 V. TESTED FOR LOW LEAKAGE. QSC P/N QD-0007.5-ZT.
7. ⚠ ZENERS D 952, 955, 6.2V-500mW, TESTED FOR LOW LEAKAGE. QSC P/N QD-0006.2-QD.
8. ⚠ PARTS MARKED WITH TRIANGLE ⚠ MUST BE REPLACED WITH EXACT TYPE ONLY.
9. PARTS ENCLOSED WITHIN DOTTED OUTLINE - - - - HAVE VOLTAGES GREATER THAN 42V