# KENWOOD

# STEREO INTEGRATED AMPLIFIER

# KA-4006

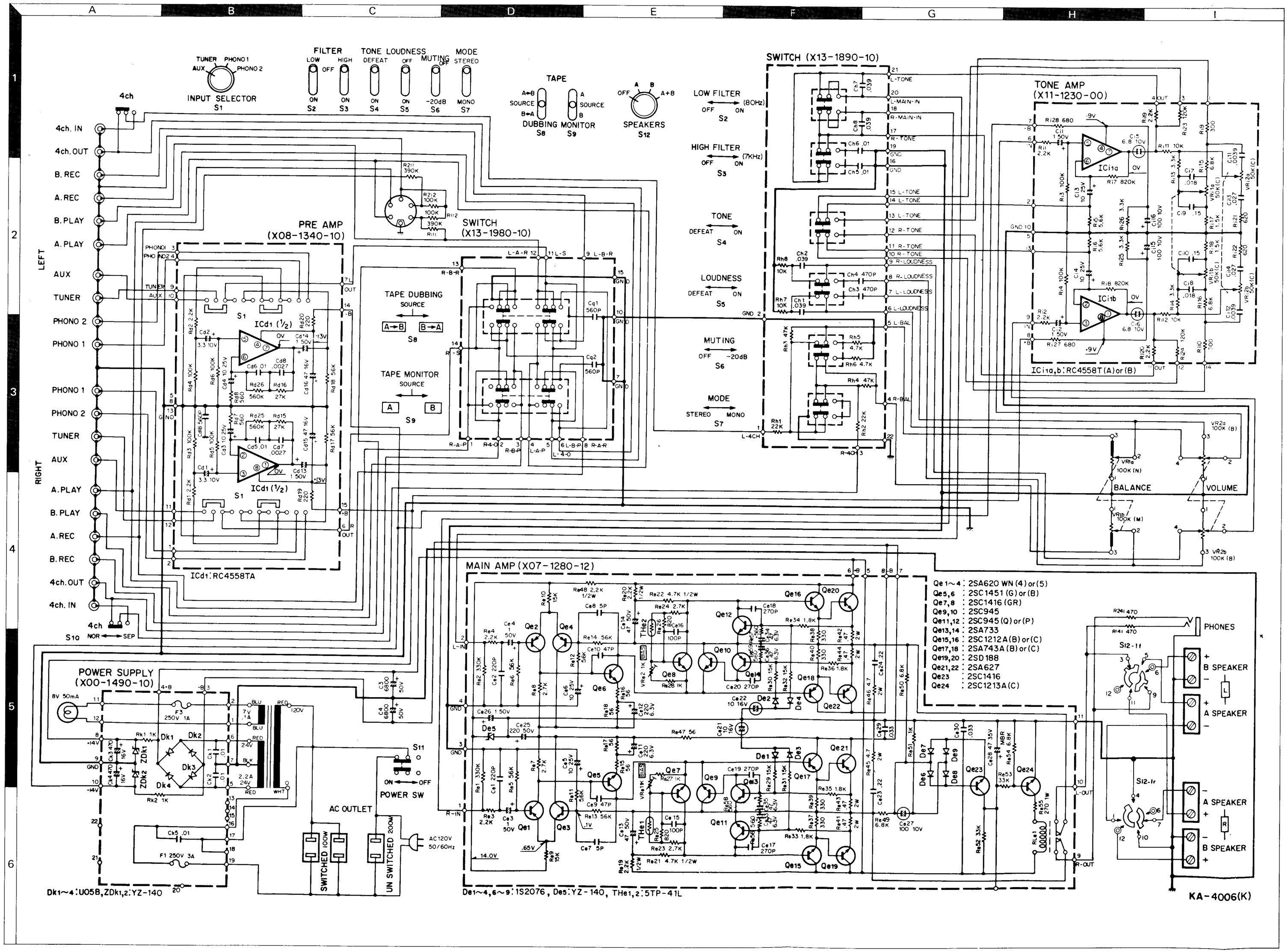


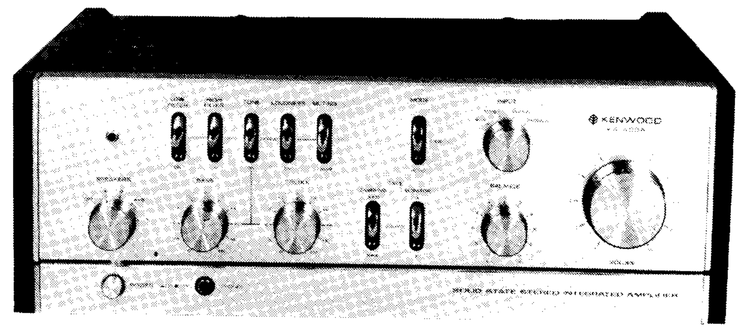

## SPECIFICATIONS

| | | |
|---|---|---|
| **RMS Power Output** | | |
| **Both channel driven** | 34 x 2 watts into 8 ohms at 20 Hz – 20,000 Hz | |
| | 35 x 2 watts into 8 ohms at 1,000 Hz | |
| | 48 x 2 watts into 4 ohms at 1,000 Hz | |
| **Each channel driven** | 40 x 2 watts into 8 ohms at 1,000 Hz | |
| | 56 x 2 watts into 4 ohms at 1,000 Hz | |
| **Dynamic Power Output** | 95 watts into 8 ohms | |
| | 145 watts into 4 ohms | |
| **Total Harmonic Distortion** | 0.5% at rated power into 8 ohms | |
| | 0.05% at 1/2 rated power into 8 ohms at 1,000 Hz | |
| **Inter Modulation Distortion** | 0.5% at rated power into 8 ohms | |
| **(60 Hz : 7 kHz = 4 : 1)** | 0.08% at 1/2 rated power into 8 ohms | |
| **Power Bandwidth** | 8 Hz – 45 kHz | |
| **Signal to Noise Ratio** | 110 dB (Short circuited) | |
| **Damping Factor** | 32 at 8 ohms | |
| **Speaker Impedance** | Accept 4 ohms to 16 ohms | |

## PRE-AMPLIFIER SECTION

| | | |
|---|---|---|
| **Input Sensitivity and Impedance** | | |
| **Phono 1** | 2.5mV | 50 K ohms |
| **Phono 2** | 2.5mV | 50 K ohms |
| **Tuner** | 150mV | 50 K ohms |
| **AUX** | 150 mV | 50 K ohms |
| **Tape Play A, B, 4 CH IN** | 150 mV | 50 K ohms |
| **Maximum Input Voltage (rms)** | | |
| **Phono 1, 2** | 140mV T.H.D. 0.5% at 1,000 Hz | |
| **Signal to Noise Ratio (IHF A CURVE)** | | |
| **Phono 1, 2** | 76 dB | |
| **Tuner** | 90 dB | |
| **AUX** | 90 dB | |
| **Tape Play A, B, 4 CH IN** | 90 dB | |
| **Output Voltage and Impedance** | | |
| **Tape Rec. A, B (Pin)** | 150mV | 50 ohms |
| **(Din connector)** | 40 mV | 70 K ohms |
| **4 CH OUT** | 150mV | 50 ohms |
| **Frequency Response** | | |
| **Phono 1, 2** | RIAA Standard curve | ±0.3 dB |
| **Tuner, AUX, Tape Play** | 10 Hz 40 kHz $^{+0}_{-1.5}$dB | |
| **Tone Controls** | | |
| **Bass** | ±10 dB at 100 Hz | |
| **Treble** | ±10 dB at 10,000 Hz | |
| **Loudness Control (–30 dB)** | +8 dB at 100 Hz | |
| | +3 dB at 10,000 Hz | |
| **Low Filter 80 Hz** | 6 dB/ oct | |
| **High Filter 7 kHz** | 6 dB/ oct | |

## GENERAL

| | |
|---|---|
| **Switches** | |
| **Speaker Selector** | OFF – A, B, A + B |
| **Input Selector** | Phono 1, 2, Tuner Aux. |
| **Mode** | Stereo – Mono |
| **Function** | Muting, Tone Defeat, Low & Hi Filter, Loud. |
| **Tape Monitor** | A, B, Tape Dubbing A → B B → A |
| **Others** | Phones jack |
| **AC Outlet** | Switched 2, Unswitched 1 |
| **Power Consumption** | 140 watts at full power |
| **Dimensions** | W 17-1/8" (435mm), H 6-3/16" (157mm), D 12" (306mm) |
| **Weight** | 24.2 lbs (11 kg) |

Main amp units of KR-5400, KR-4400 and KA-4006 are revised for using New DC Voltage Protection Circuit. KR-5400's is revised from (X07-1280-10) to (X07-1350-10), KR-4400's from (X07-1280-11) to (X07-1350-11) and KA-4006's from (X07-1280-12) to (X07-1350-12). Refer to SERVICE BULLETIN NO. SB-059 about circuit description. As to specifications, no amendment is needed.

**MAIN AMP (X07-1350-10)**

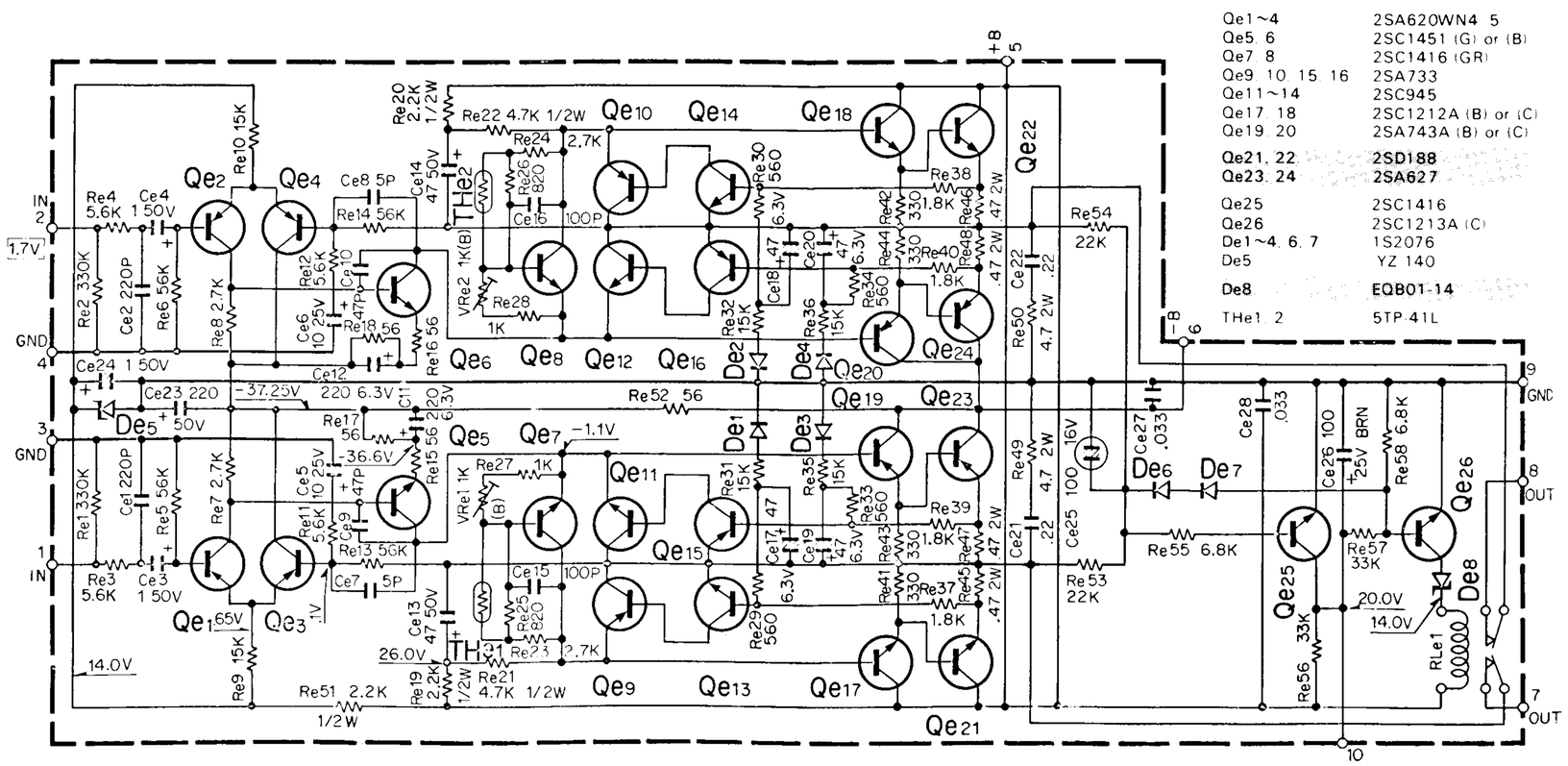


The schematic diagram shown above is KR-5400 main amp unit (X07-1350-10). KR-4400 is modified from (X07-1350-10) to (X07-1350-11) and KA-4006's from (X07-1350-10) to (X07-1350-12). Modification points are marked on the schematic diagram with black screen and showed in the parts list.

## ■ PARTS LIST

| Ref No | Parts No | Description | | | | Remarks |
|---|---|---|---|---|---|---|
| | | **CAPACITOR** | | | | |
| Ce1, 2 | CC45SL1H221K | Ceramic | 220pF | ±10% | | |
| Ce3, 4 | CE04W1H010 | Electrolytic | 1μF | | 50WV | |
| Ce5, 6 | CE04W1E100 | Electrolytic | 10μF | | 25WV | |
| Ce7, 8 | CC45SL1H050D | Ceramic | 5pF | ±0.5pF | | |
| Ce9, 10 | CC45SL1H470K | Ceramic | 47pF | ±10% | | |
| Ce11, 12 | CE04W0J221 | Electrolytic | 220μF | | 6.3WV | |
| Ce13, 14 | CE04W1H470 | Electrolytic | 47μF | | 50WV | |
| Ce15, 16 | CC45SL1H101K | Ceramic | 100pF | ±10% | | |
| Ce17~20 | CE04W0J470 | Electrolytic | 47μF | | 6.3WV | |
| Ce21, 22 | CQ93M1H224M | Mylar | 0.22μF | ±20% | | |
| Ce23 | CE04W1H221 | Electrolytic | 220μF | | 50WV | |
| Ce24 | CE04W1H010 | Electrolytic | 1μF | | 50WV | |
| Ce25 | CE04W1C101 (NP) | Non-pole Electrolytic | 100μF | | 16WV | |
| Ce26 | CE04W1E101M-BR | Electrolytic | 100μF | | 25WV | |
| Ce27 | CQ93M1H333M | Mylar | 0.033μF | ±20% | | |
| Ce28 | CQ93M1H333M | Mylar | 0.033μF | ±20% | | 10, 11 |
| | CQ93M1H104M | Mylar | 0.1μF | ±20% | | 12 |
| | | **RESISTOR** | | | | |
| Re1, 2 | PD14CY2E334J | Carbon | 330kΩ | ±5% | 1/4W | |
| Re3, 4 | PD14CY2E562J | Carbon | 5.6kΩ | ±5% | 1/4W | 10, 11 |
| | PD14CY2E222J | Carbon | 2.2kΩ | ±5% | 1/4W | 12 |
| Re5, 6 | PD14CY2E563J | Carbon | 56kΩ | ±5% | 1/4W | |
| Re7, 8 | PD14CY2E272J | Carbon | 2.7kΩ | ±5% | 1/4W | |
| Re9 | PD14CY2E153J | Carbon | 15kΩ | ±5% | 1/4W | |
| Re10 | PD14BY2E153J | Carbon | 15kΩ | ±5% | 1/4W | |
| Re11, 12 | PD14CY2E562J | Carbon | 5.6kΩ | ±5% | 1/4W | |
| Re13 | PD14BY2E563J | Carbon | 56kΩ | ±5% | 1/4W | |
| Re14 | PD14CY2E563J | Carbon | 56kΩ | ±5% | 1/4W | |
| Re15~18 | PD14CY2E560J | Carbon | 56Ω | ±5% | 1/4W | |
| Re19, 20 | RC05GF2H222K | Carbon | 2.2kΩ | ±10% | 1/2W | |
| Re21, 22 | RC05GF2H472K | Carbon | 4.7kΩ | ±10% | 1/2W | |
| Re23, 24 | PD14CY2E272J | Carbon | 2.7kΩ | ±5% | 1/4W | |
| Re25, 26 | PD14BY2E821J | Carbon | 820Ω | ±5% | 1/4W | |
| Re27 | PD14CY2E102J | Carbon | 1kΩ | ±5% | 1/4W | |
| Re28 | PD14BY2E102J | Carbon | 1kΩ | ±5% | 1/4W | |
| Re29, 30 | PD14CY2E561J | Carbon | 560Ω | ±5% | 1/4W | 10, 12 |
| | PD14CY2E681J | Carbon | 680Ω | ±5% | 1/4W | 11 |
| Re31 | PD14BY2E153J | Carbon | 15kΩ | ±5% | 1/4W | |
| Re32 | PD14CY2E153J | Carbon | 15kΩ | ±5% | 1/4W | |
| Re33, 34 | PD14BY2E561J | Carbon | 560Ω | ±5% | 1/4W | 10, 12 |
| | PD14BY2E681J | Carbon | 680Ω | ±5% | 1/4W | 11 |
| Re35, 36 | PD14CY2E153J | Carbon | 15kΩ | ±5% | 1/4W | |
| Re37~40 | PD14BY2E182J | Carbon | 1.8kΩ | ±5% | 1/4W | |
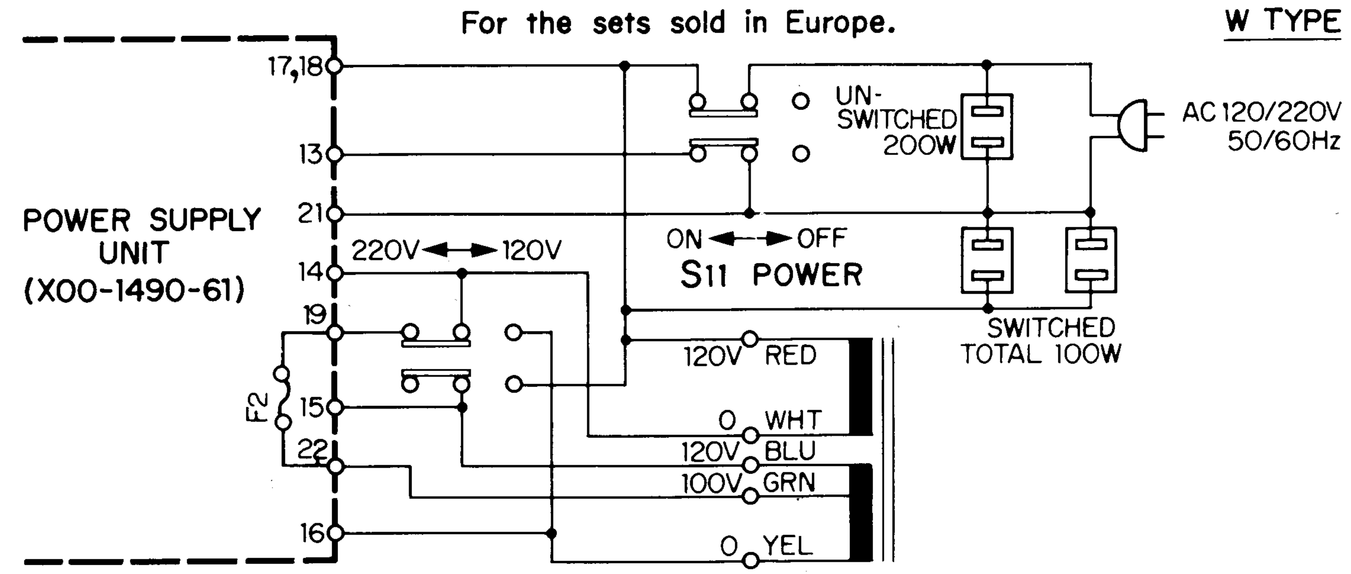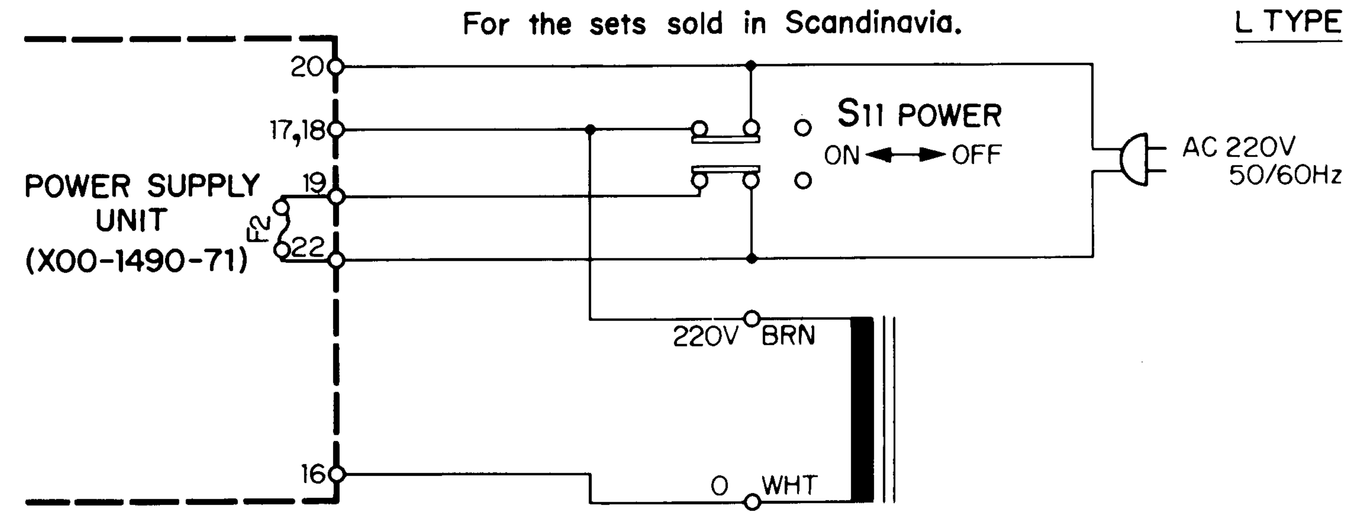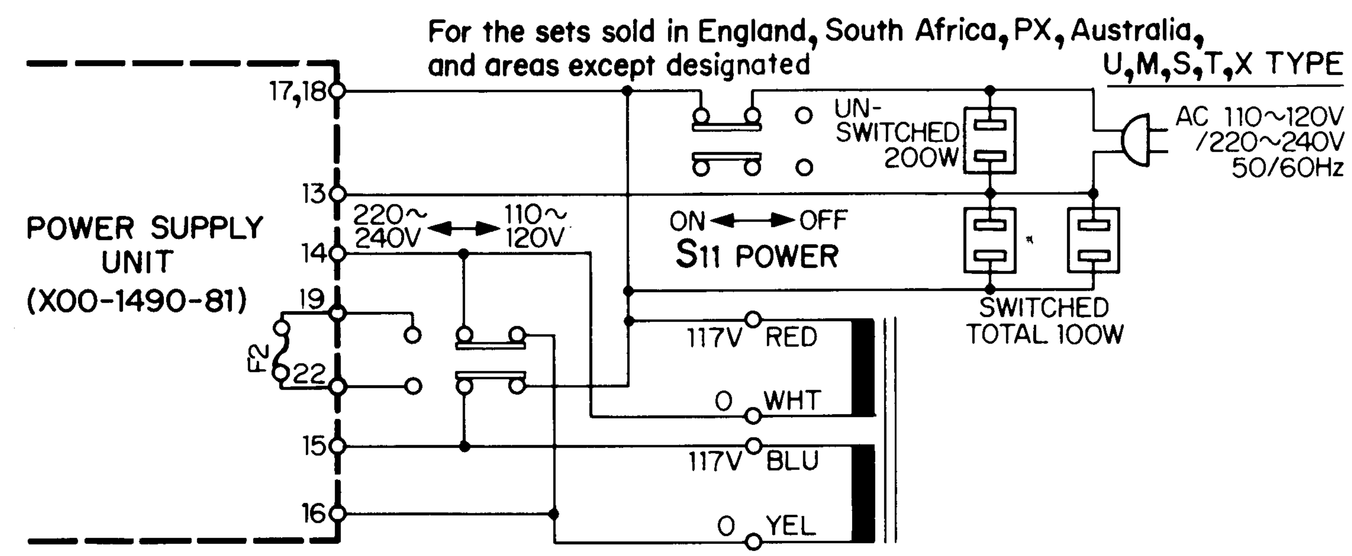
| Ref No | Parts No | Description | | | | Remarks |
|---|---|---|---|---|---|---|
| | | **RESISTOR** | | | | |
| Re41~44 | PD14BY2E331J-B | Carbon | 330Ω | ±5% | 1/4W | |
| Re45~48 | RN14AB3-DR47K-B | Metal film | 0.47Ω | ±10% | 2W | |
| Re49, 50 | RN14AB3-D4R7K-B | Metal film | 4.7Ω | ±10% | 2W | |
| Re51 | RC05GF2H222K | Carbon | 2.2kΩ | ±10% | 1/2W | |
| Re52 | PD14BY2E560J-B | Carbon | 56Ω | ±5% | 1/4W | |
| Re53, 54 | PD14BY2E223J | Carbon | 22kΩ | ±5% | 1/4W | |
| Re55 | PD14CY2E682J | Carbon | 6.8kΩ | ±5% | 1/4W | |
| Re56, 57 | PD14CY2E333J | Carbon | 33kΩ | ±5% | 1/4W | |
| Re58 | PD14CY2E682J | Carbon | 6.8kΩ | ±5% | 1/4W | |
| | | **SEMICONDUCTOR** | | | | |
| Qe1~4 | V01-0127-05 | Transistor 2SA620WN4 or 5 | | | | |
| Qe5, 6 | V03-0360-05 | Transistor 2SC1451 (G) or (B) | | | | |
| Qe7, 8 | V03-0358-05 | Transistor 2SC1416 (GR) | | | | |
| Qe9, 10 | V01-0084-05 | Transistor 2SA733 | | | | |
| Qe11~14 | V03-0270-05 | Transistor 2SC945 | | | | |
| Qe15, 16 | V01-0084-05 | Transistor 2SA733 | | | | |
| Qe17, 18 | V03-0235-05 | Transistor 2SC1212A (B) or (C) | | | | |
| Qe19, 20 | V01-0119-05 | Transistor 2SA743A (B) or (C) | | | | |
| Qe21, 22 | V04-0037-05 | Transistor 2SD188 | | | | 10, 12 |
| | V03-0321-05 | Transistor 2SC1444 | | | | 11 |
| Qe23, 24 | V01-0062-05 | Transistor 2SA627 | | | | 10, 12 |
| | V01-0098-05 | Transistor 2SA764 | | | | 11 |
| Qe25 | V03-0358-05 | Transistor 2SC1416 | | | | |
| Qe26 | V03-0235-05 | Transistor 2SC1213A (C) | | | | |
| De1~4 | V11-0273-05 | Diode 1S2076 | | | | |
| De5 | V11-0254-05 | Zener diode YZ-140 | | | | |
| De6, 7 | V11-0273-05 | Diode 1S2076 | | | | |
| De8 | V11-0354-05 | Diode EQB01-14 | | | | 10 |
| | | Diode EQB01-08 | | | | 11 |
| | | Diode EQB01-11 | | | | 12 |
| THe1, 2 | V22-0027-05 | Thermistor 5TP-41L | | | | |
| | | **MISCELLANEOUS** | | | | |
| VRe1, 2 | R12-1012-05 | PC trimmer potentiometer 1kΩ (B) | | | | |
| RLe1 | S51-4029-05 | Relay | | | | |
| – | E02-0209-05 | Transistor socket × 4 | | | | |
| – | F01-0107-23 | Relay | | | | |
| – | F20-0066-05 | Mica plate × 4 | | | | |