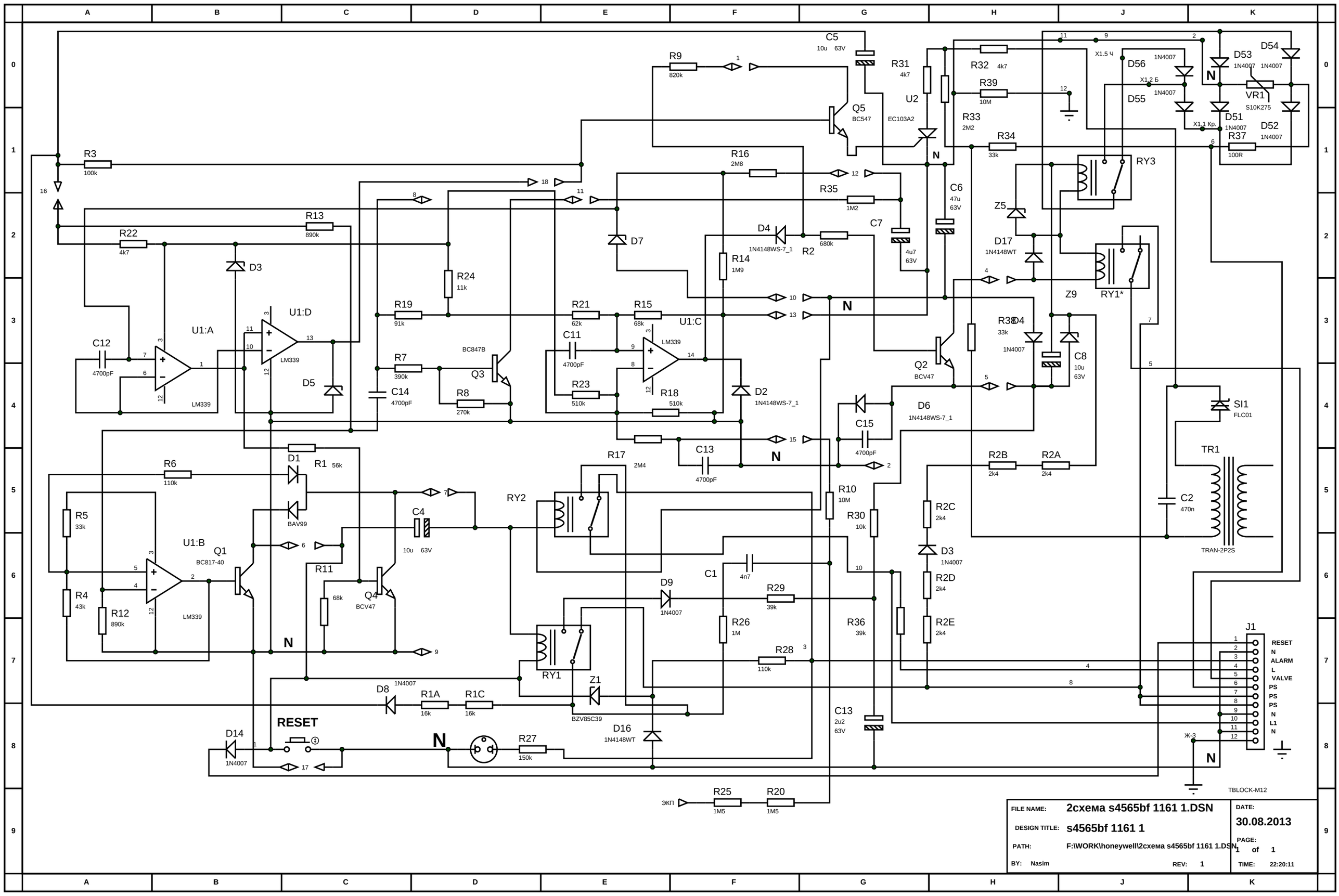
R3 100k
R22 4k7
R13 890k
D3
C12 4700pF
U1:A
LM339
U1:D
D5
R24 11k
R19 91k
R7 390k
C14 4700pF
BC847B
Q3
R8 270k
R21 62k
R15 68k
U1:C
C11 4700pF
R23 510k
R18 510k
D2 1N4148WS-7_1
R9 820k
C5 10u 63V
Q5 BC547
R16 2M8
R35 1M2
D7
D4 1N4148WS-7_1
R2 680k
R14 1M9
C7 4u7 63V
R31 4k7
U2 EC103A2
C6 47u 63V
R32 4k7
R39 10M
R33 2M2
R34 33k
X1.5 Ч
X1.2 Б
X1.1 Кр.
D56 1N4007
D55 1N4007
D53 1N4007
D54 1N4007
D51 1N4007
D52 1N4007
VR1 S10K275
R37 100R
RY3
Z5
D17 1N4148WT
RY1*
Z9
R38 33k
D4 1N4007
C8 10u 63V
Q2 BCV47
D6 1N4148WS-7_1
C15 4700pF
SI1 FLC01
TR1 TRAN-2P2S
C2 470n
R2B 2k4
R2A 2k4
R2C 2k4
D3 1N4007
R2D 2k4
R2E 2k4
R6 110k
D1
R1 56k
BAV99
R5 33k
R4 43k
R12 890k
U1:B
Q1 BC817-40
LM339
R11 68k
Q4 BCV47
C4 10u 63V
RY2
R17 2M4
C13 4700pF
R10 10M
R30 10k
C1 4n7
D9 1N4007
R29 39k
R26 1M
R36 39k
R28 110k
RY1
Z1 BZV85C39
D16 1N4148WT
C13 2u2 63V
D8 1N4007
R1A 16k
R1C 16k
RESET
D14 1N4007
R27 150k
ЭКП
R25 1M5
R20 1M5
J1
RESET
N
ALARM
L
VALVE
PS
PS
PS
N
L1
N
Ж-3
TBLOCK-M12
FILE NAME: 2схема s4565bf 1161 1.DSN
DESIGN TITLE: s4565bf 1161 1
PATH: F:\WORK\honeywell\2схема s4565bf 1161 1.DSN
BY: Nasim
REV: 1
DATE: 30.08.2013
PAGE: 1 of 1
TIME: 22:20:11