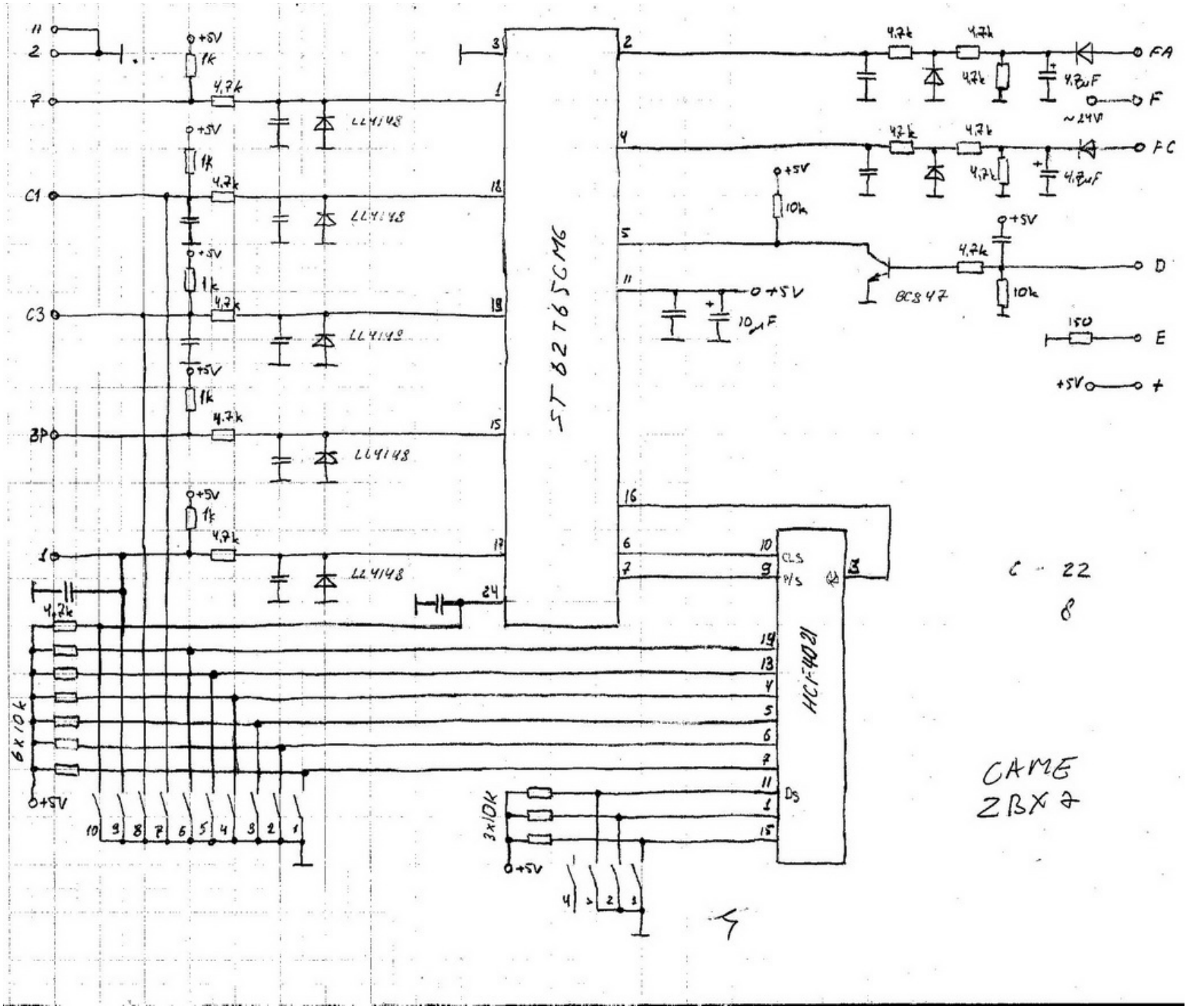
ST 62T65CM6
HCF4021
LL4148
BC847
FA
F
FC
D
E
+
~24V
C1
C3
BP
1
6x10k
3x10k
+5V
C - 22
8
CAME
ZBX 7
4

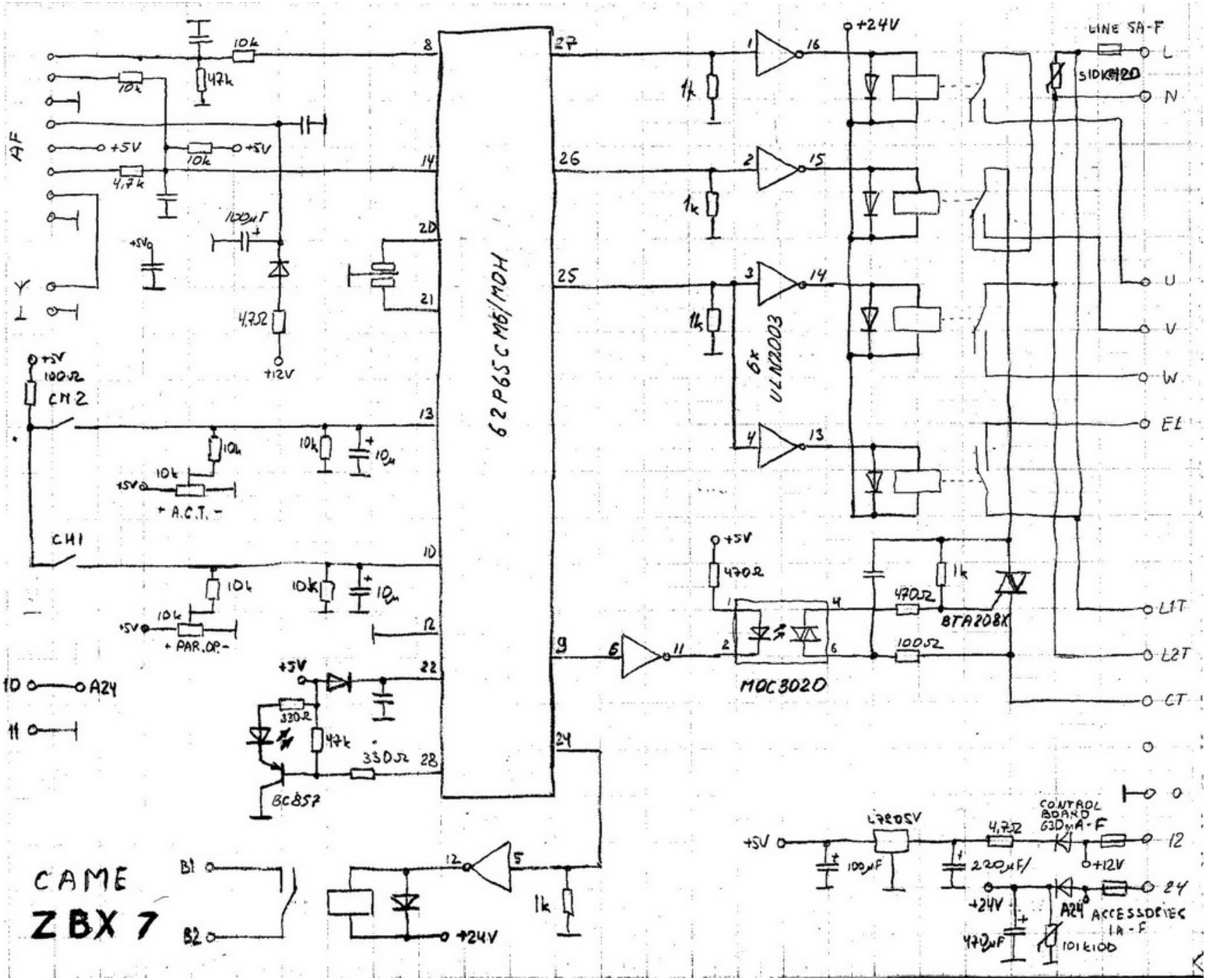
CAME
ZBX 7
62P65CM6/MOH
6x ULN2003
MOC3020
BTA208X
BC857
CH2
CH1
+ A.C.T. -
+ PAR.OP. -
LINE 5A-F
S10K420
CONTROL BOARD 630mA-F
L7805V
A24 ACCESSORIES 1A-F
101K100
+24V
+12V
+5V
AF
L
N
U
V
W
EL
L1T
L2T
CT
A24
B1
B2