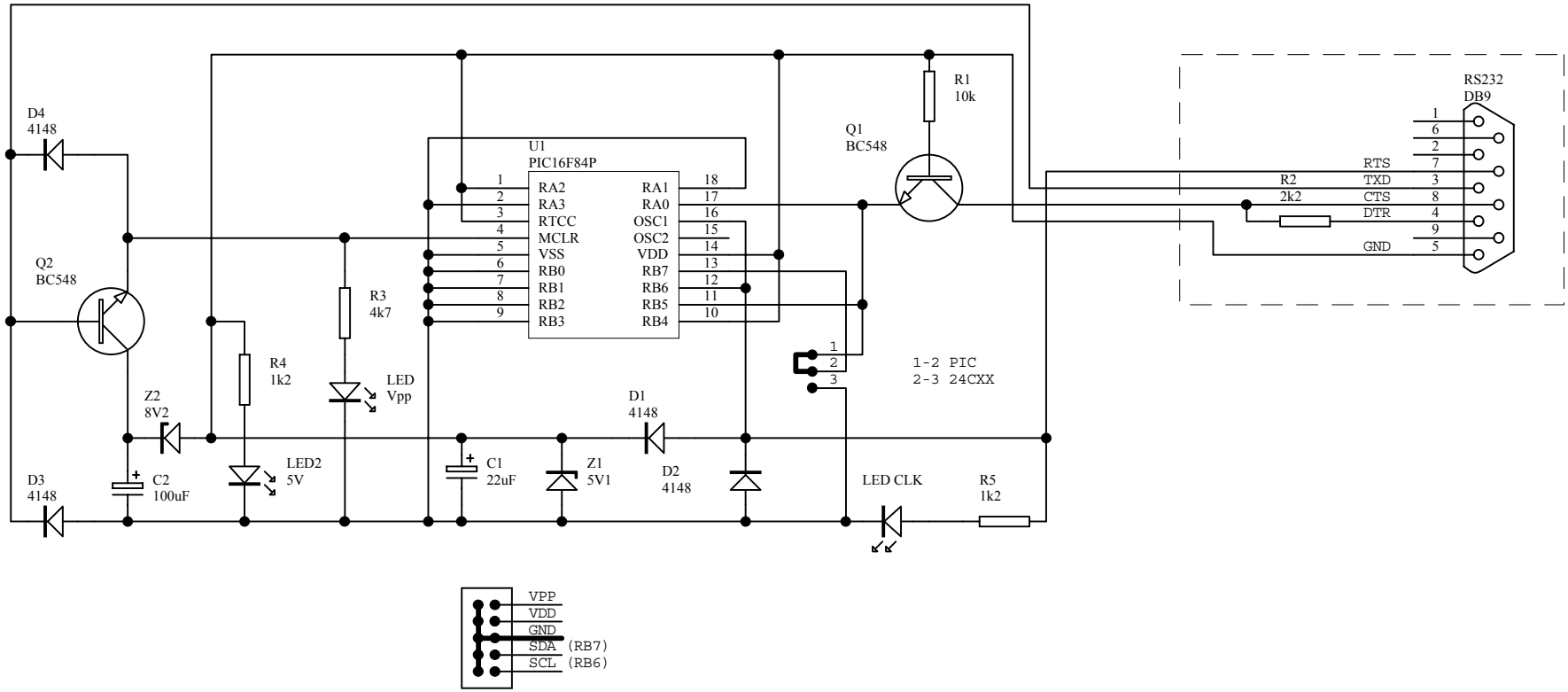

Title		
Size A4	Number	Revision
Date: 31-Jul-2001		Sheet of
File: C:\CAD\SCH\JDM2001.S01		Drawn By: