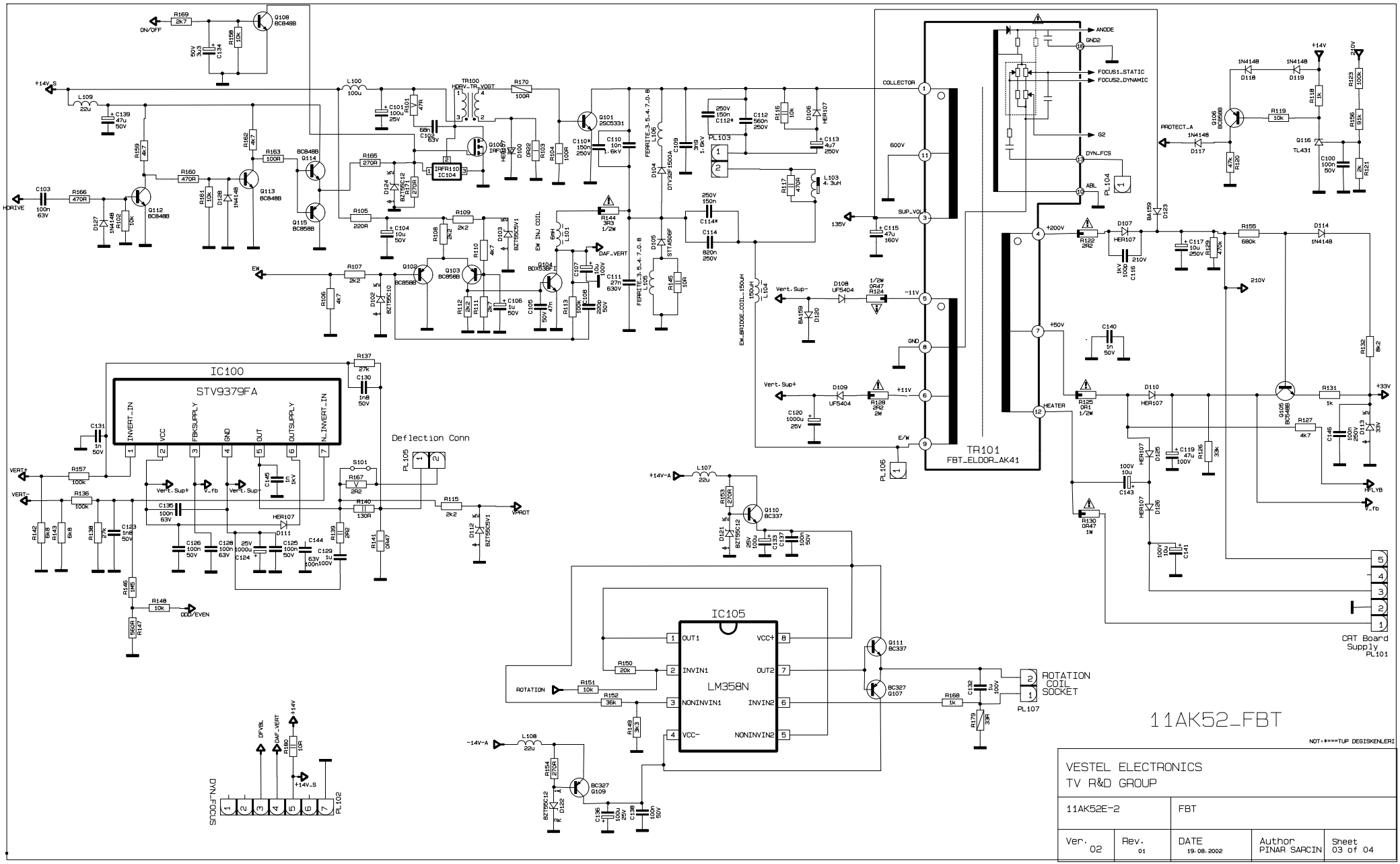
IC100
STV9379FA
INVERT_IN
VCC
FBKSUPPLY
GND
OUT
OUTSUPPLY
N_INVERT_IN
Deflection Conn
PL105
IC105
LM358N
OUT1
INVIN1
NONINVIN1
VCC-
VCC+
OUT2
INVIN2
NONINVIN2
ROTATION
ROTATION COIL SOCKET
PL107
TR101
FBT_ELDOR_AK41
ANODE
GND2
FOCUS1_STATIC
FOCUS2_DYNAMIC
G2
DYN_FCS
ABL
COLLECTOR
SUP_VOL
GND
E/W
HEATER
CRT Board Supply
PL101
DYNFOCUS
PL102
ON/OFF
HDRIVE
EW
VERT+
VERT-
VPROT
ODD/EVEN
HFLYB
V_fb
PROTECT_A
11AK52_FBT
NOT:****TUP DEGISKENLERI
VESTEL ELECTRONICS
TV R&D GROUP
11AK52E-2
FBT
Ver. 02
Rev. 01
DATE 19.08.2002
Author PINAR SARCIN
Sheet 03 of 04