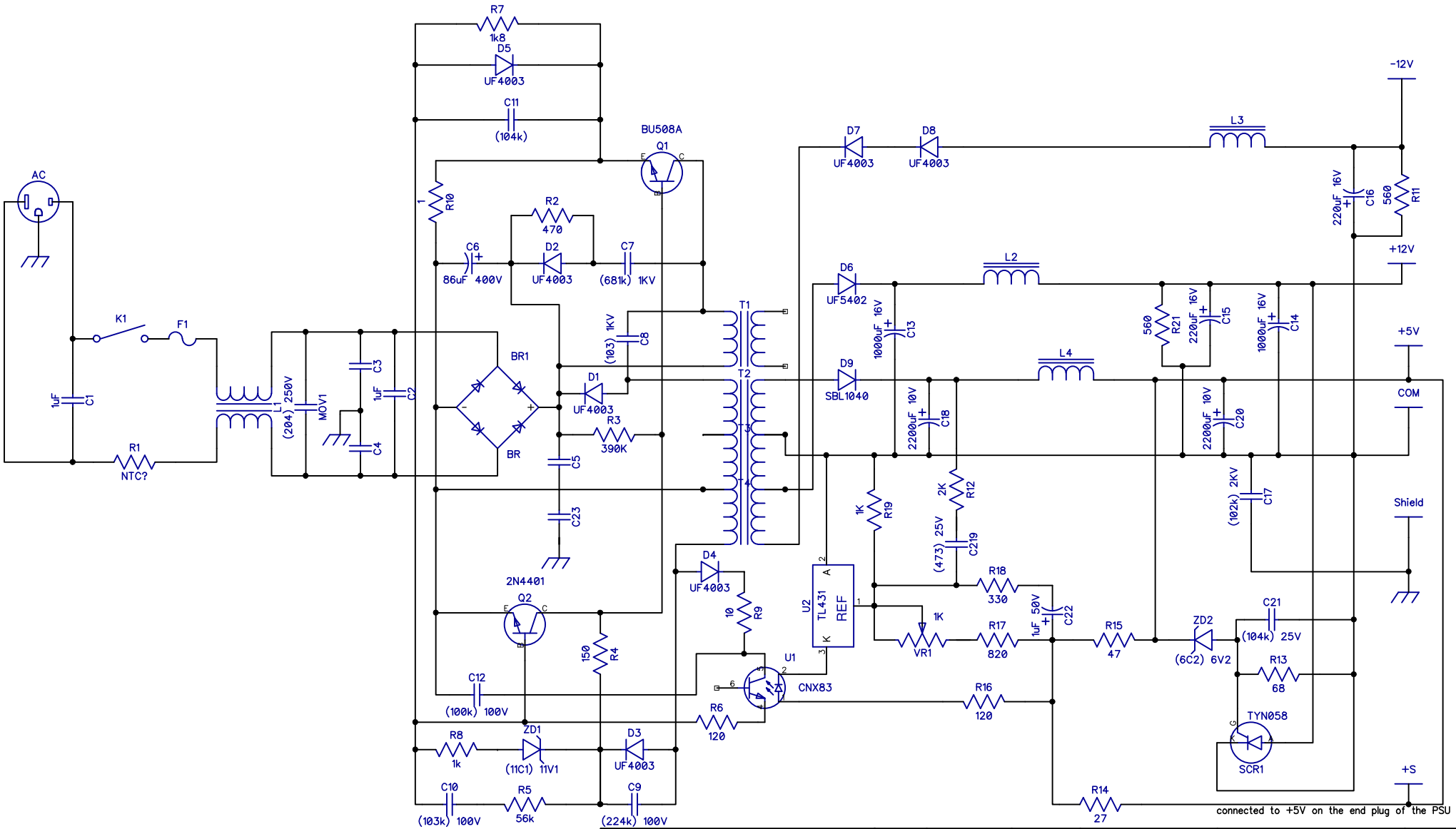

SPT290
AMIGA Switching Mode PSU

P/N:STP290PCB

Made in China
Speedy-Tech

SIZE	FSCM NO.	DWG NO.	REV
			C
SCALE			Sheet 1