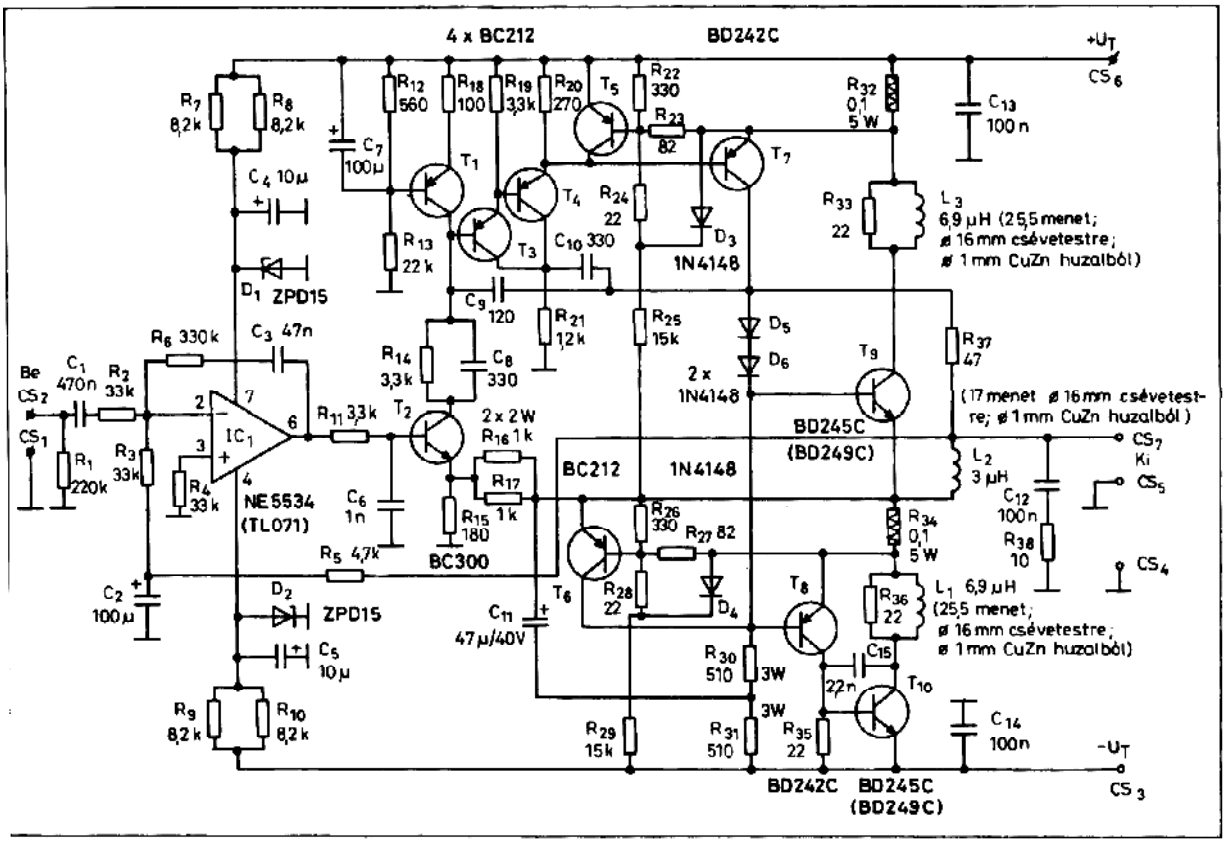
4 x BC212
BD242C
+U_T
CS 6
R7 8,2k
R8 8,2k
C4 10µ
D1 ZPD15
C7 100µ
R12 560
R18 100
R19 3,3k
R20 270
T5
R22 330
R23 82
R32 0,1 5W
C13 100n
T1
T4
T3
T7
R13 22k
R24 22
D3
1N4148
C10 330
R33 22
L3 6,9 µH (25,5 menet; ø 16 mm csévetestre; ø 1 mm CuZn huzalból)
C9 120
R21 1,2k
R25 15k
D5
D6
2 x 1N4148
R37 47
R6 330k
C3 47n
Be CS2
C1 470n
R2 33k
R14 3,3k
C8 330
T9
(17 menet ø 16 mm csévetestre; ø 1 mm CuZn huzalból)
IC1
R11 3,3k
T2
2 x 2W
R16 1k
BD245C (BD249C)
CS7 Ki
CS1
R1 220k
R3 33k
R4 33k
NE5534 (TL071)
C6 1n
R17 1k
BC212
1N4148
L2 3 µH
CS5
C12 100n
R15 180
R26 330
R27 82
R34 0,1 5W
R38 10
R5 4,7k
BC300
CS4
C2 100µ
D2 ZPD15
T6
R28 22
D4
T8
R36 22
L1 6,9 µH (25,5 menet; ø 16 mm csévetestre; ø 1 mm CuZn huzalból)
C11 47µ/40V
C5 10µ
R30 510 3W
C15 22n
T10
R9 8,2k
R10 8,2k
R29 15k
R31 510 3W
R35 22
C14 100n
-U_T
BD242C
BD245C (BD249C)
CS 3