# 10 Band Graphic Equalizer (1)

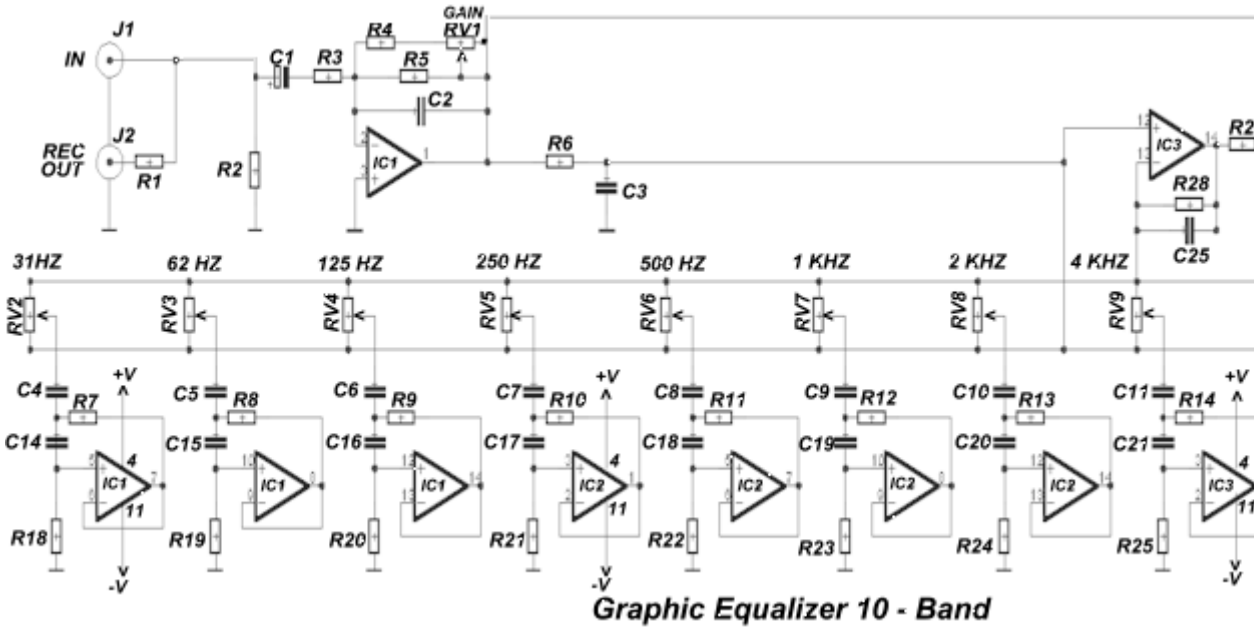


****Click on the Image for its larger version**

With graphic equalizer we make selective cutting off or boost, of selected departments of acoustic spectrum. With this way we can adapt the musical reproduction, in the characteristics of space where we hear. This can create however also problems if go to far specifically in the gain of some area, with result the distortion. The circuit should be made in two pieces, one for each channel, the potesometer regulation it should they are Fader. With switch S1 we can by pass the circuit, leaving the musical program, to pass without alteration (FLAT). With the potesometer RV1 we regulate the gain of each channel.

**ФЕЧНЙКБ ЧБСБКФЗСЙУФЙКБ РСПФХРПХ -PROTYPE SPECIFICATIONS**

| | |
|---|---|
| **Брьксйуз ухчньфзфбт - Frequency Response** | 103Ж - 30 КЗЖ ±0.5db |
| **Сэимйуз кЭсдпхт кЬие ресйпчЮт - Adjust Gain for eatch band** | ±12 dB |
| **Сэимйуз кЭсдпхт - Adjust Gain for eatch Channel** | - 9db to +14db |
| **S/N** | 82db |
| **Рбсбмьсцщуз (FLAT) - T.H.D** | 0.03% |
| **Уэниефз бнфЯуфбуз ейуьдпх - Input Impedance** | 47КЩ |
| **Уэниефз бнфЯуфбуз еоьдпх - Output Impedance** | 100Щ |
| **ФспцпдпуЯб - Power Supply** | ±15V dc / 300 mA |

**Part List**

| | | |
|---|---|---|
| R1-29=100 ohms | C7=220nF 100V | C20=1nF 100V |
| R2-5-31=1Mohms | C8=100nF 100V | C21=560pF |
| R3=47Kohms | C9=47nF 100V | C22=270pF |
| R4=15Kohms | C10=27nF 100V | C23=150pF |

| | | |
|---|---|---|
| R6-28=10Kohms | C11=12nF 100V | C25=150pF |
| R7....17=1Kohms | C12=6.8nF 100V | C26=10uF/25V |
| R18....27=220Kohms | C13=3.3nF 100V | RV1=250Kohms Lin. |
| C1=47uF/25V | C14=68nF 100V | RV2.....12=4.7Kohms Lin. |
| C2=47pF | C15=33nF 100V | IC1...3=**TL074** |
| C3=150pF | C16=18nF 100V | S1=2X2 SW |
| C4=1.5uF 100V | C17=8.2nF 100V | J1...3=RCA Jack |
| C5=820nF 100V | C18=3.9nF 100V | All Resitors is 1/4W 1% |
| C6=390nF 100V | C19=2.2nF 100V | |