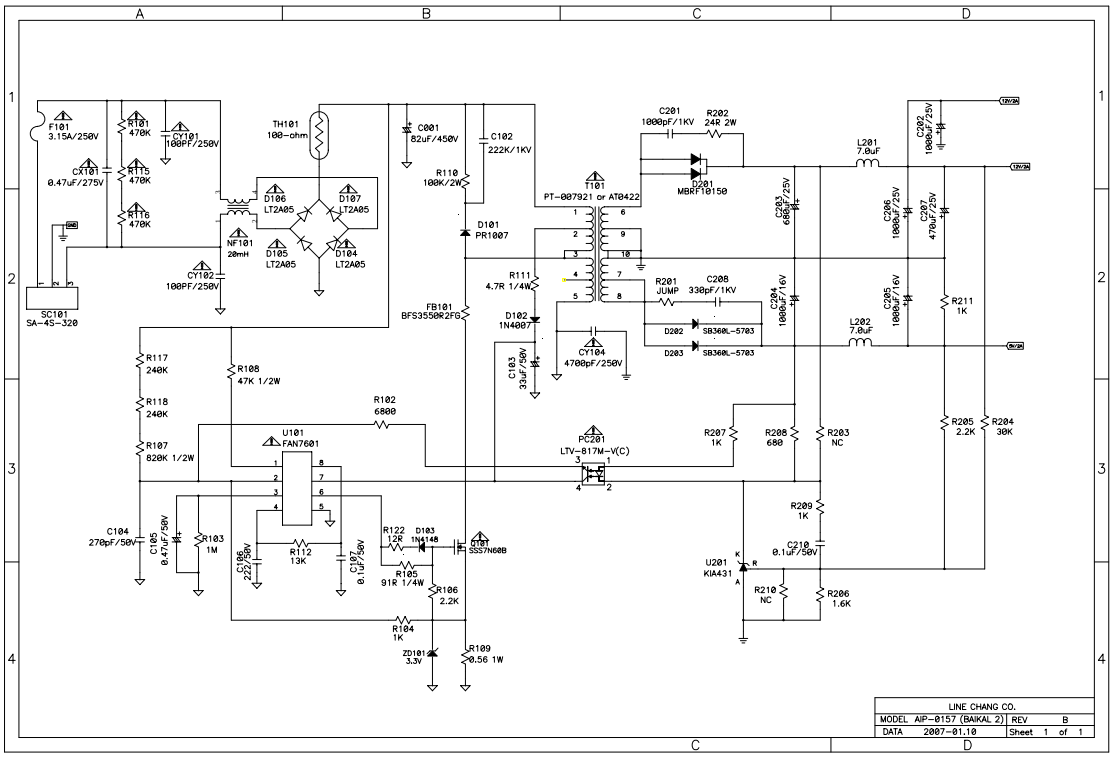
F101
3.15A/250V
CX101
0.47uF/275V
R101
470K
R115
470K
R116
470K
CY101
100PF/250V
CY102
100PF/250V
SC101
SA-4S-320
TH101
100-ohm
NF101
20mH
D106
LT2A05
D107
LT2A05
D105
LT2A05
D104
LT2A05
C001
82uF/450V
C102
222K/1KV
R110
100K/2W
D101
PR1007
FB101
BFS3550R2FG
D102
1N4007
R111
4.7R 1/4W
T101
PT-007921 or AT0422
C201
1000pF/1KV
R202
24R 2W
D201
MBRF10150
R201
JUMP
C208
330pF/1KV
D202
SB360L-5703
D203
SB360L-5703
CY104
4700pF/250V
C103
33uF/50V
L201
7.0uF
L202
7.0uF
C202
1000uF/25V
C203
680uF/25V
C206
1000uF/25V
C207
470uF/25V
C204
1000uF/16V
C205
1000uF/16V
R211
1K
R117
240K
R118
240K
R107
820K 1/2W
R108
47K 1/2W
R102
6800
U101
FAN7601
PC201
LTV-817M-V(C)
R207
1K
R208
680
R203
NC
R205
2.2K
R204
30K
R209
1K
C210
0.1uF/50V
U201
KIA431
R210
NC
R206
1.6K
C104
270pF/50V
C105
0.47uF/50V
R103
1M
C106
222/50V
R112
13K
C107
0.1uF/50V
R122
12R
D103
1N4148
Q101
SSS7N60B
R105
91R 1/4W
R106
2.2K
R104
1K
ZD101
3.3V
R109
0.56 1W
LINE CHANG CO.
MODEL AIP-0157 (BAIKAL 2)
REV B
DATA 2007-01.10
Sheet 1 of 1

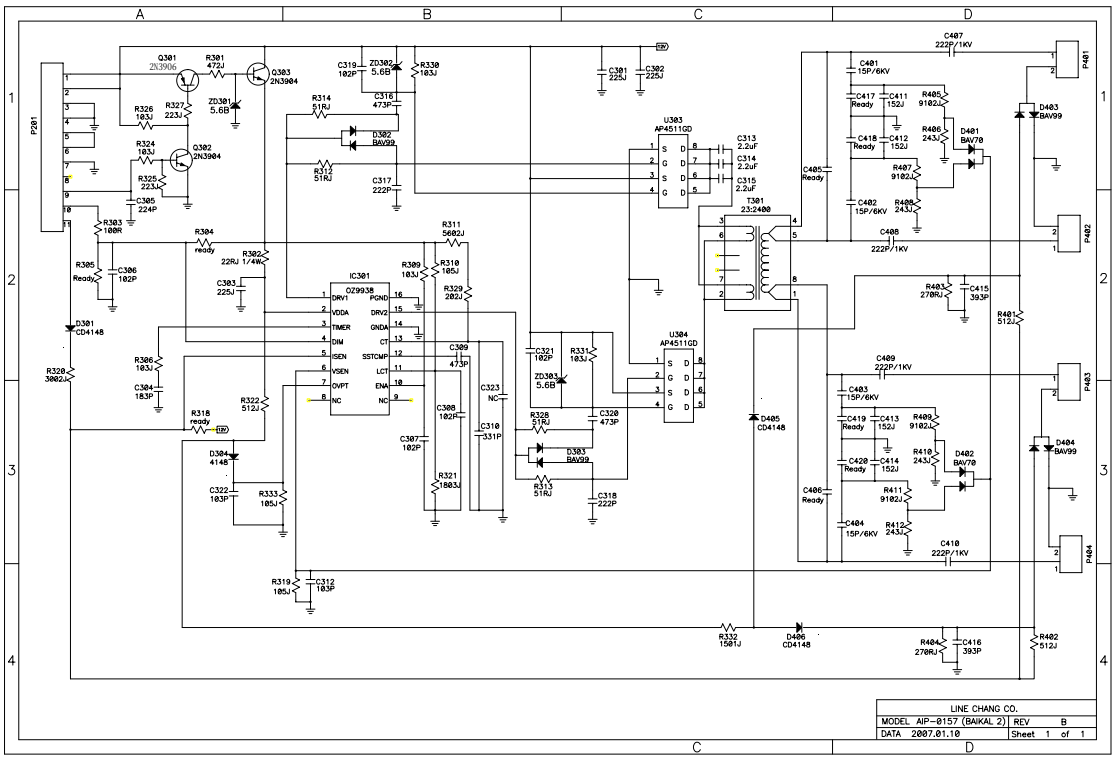
P201
Q301
2N3906
R301
47J
Q303
2N3904
C319
102P
ZD302
5.6B
R330
103J
C316
473P
R326
103J
R327
223J
ZD301
5.6B
R314
51RJ
D302
BAV99
R324
103J
Q302
2N3904
R325
223J
R312
51RJ
C317
222P
C305
224P
R303
100R
R304
ready
R302
22RJ 1/4W
R305
Ready
C306
102P
C303
225J
D301
CD4148
R320
3002J
R306
103J
C304
183P
R322
512J
R318
ready
D304
4148
C322
183P
R333
105J
IC301
OZ9938
DRV1
VDDA
TIMER
DIM
ISEN
VSEN
OVPT
NC
PGND
DRV2
GNDA
CT
SSTCMP
LCT
ENA
NC
R311
560J
R309
103J
R310
105J
R329
202J
C309
473P
C308
102P
C307
102P
R321
1803J
C310
331P
C323
NC
C321
102P
R331
103J
ZD303
5.6B
R328
51RJ
D303
BAV99
R313
51RJ
C320
473P
C318
222P
U303
AP4511GD
U304
AP4511GD
C313
2.2uF
C314
2.2uF
C315
2.2uF
T301
23:2400
C301
225J
C302
225J
C407
222P/1KV
C401
15P/6KV
C417
Ready
C411
152J
R405
9102J
C418
Ready
C412
152J
R406
243J
D401
BAV70
R407
9102J
C402
15P/6KV
R408
243J
C408
222P/1KV
C405
Ready
R403
270RJ
C415
393P
R401
512J
C409
222P/1KV
C403
15P/6KV
C419
Ready
C413
152J
R409
9102J
C420
Ready
C414
152J
R410
243J
D402
BAV70
R411
9102J
C406
Ready
C404
15P/6KV
R412
243J
C410
222P/1KV
D405
CD4148
D403
BAV99
D404
BAV99
P401
P402
P403
P404
R319
105J
C312
183P
R332
1501J
D406
CD4148
R404
270RJ
C416
393P
R402
512J
LINE CHANG CO.
MODEL AIP-0157 (BAIKAL 2)
REV B
DATA 2007.01.10
Sheet 1 of 1