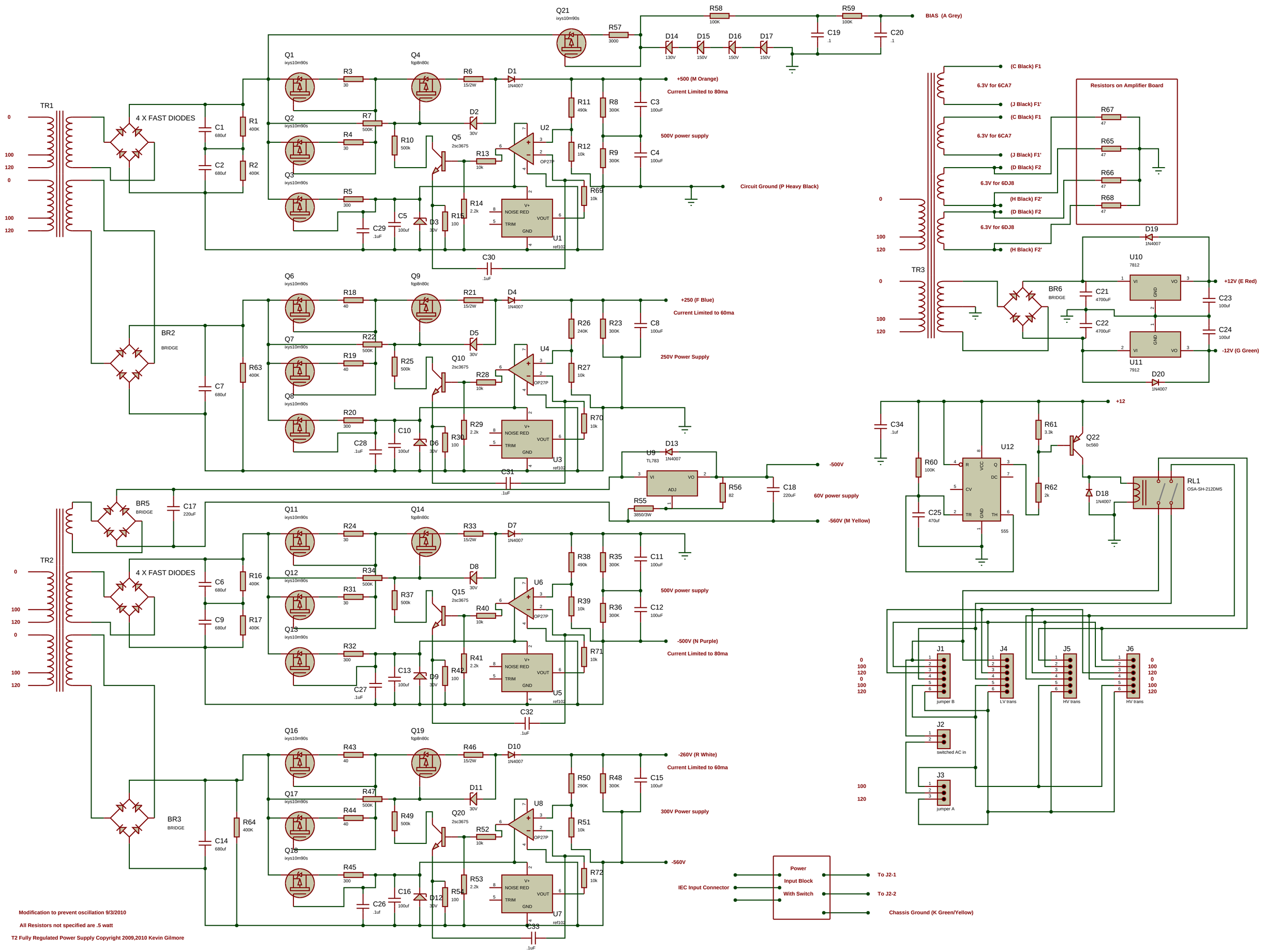

Modification to prevent oscillation 9/3/2010

All Resistors not specified are .5 watt

T2 Fully Regulated Power Supply Copyright 2009,2010 Kevin Gilmore