REVISION RECORD			
LTR	ECO NO:	APPROVED:	DATE:

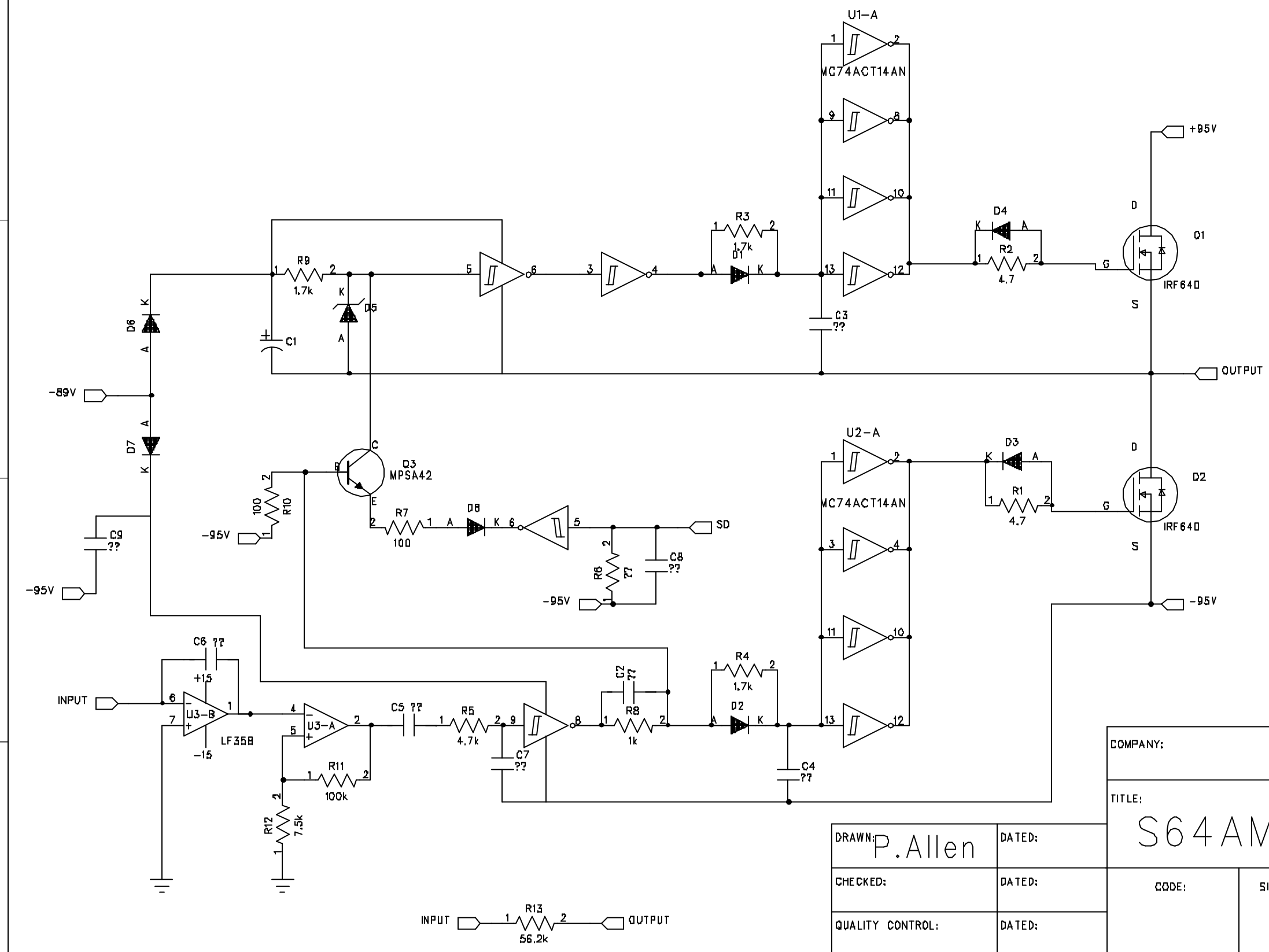

DRAWN: P.Allen	DATED:	COMPANY:	
CHECKED:	DATED:	TITLE: S64AMI power module	
QUALITY CONTROL:	DATED:	CODE: / SIZE: / DRAWING NO:	REV:
RELEASED:	DATED:	SCALE:	SHEET: OF