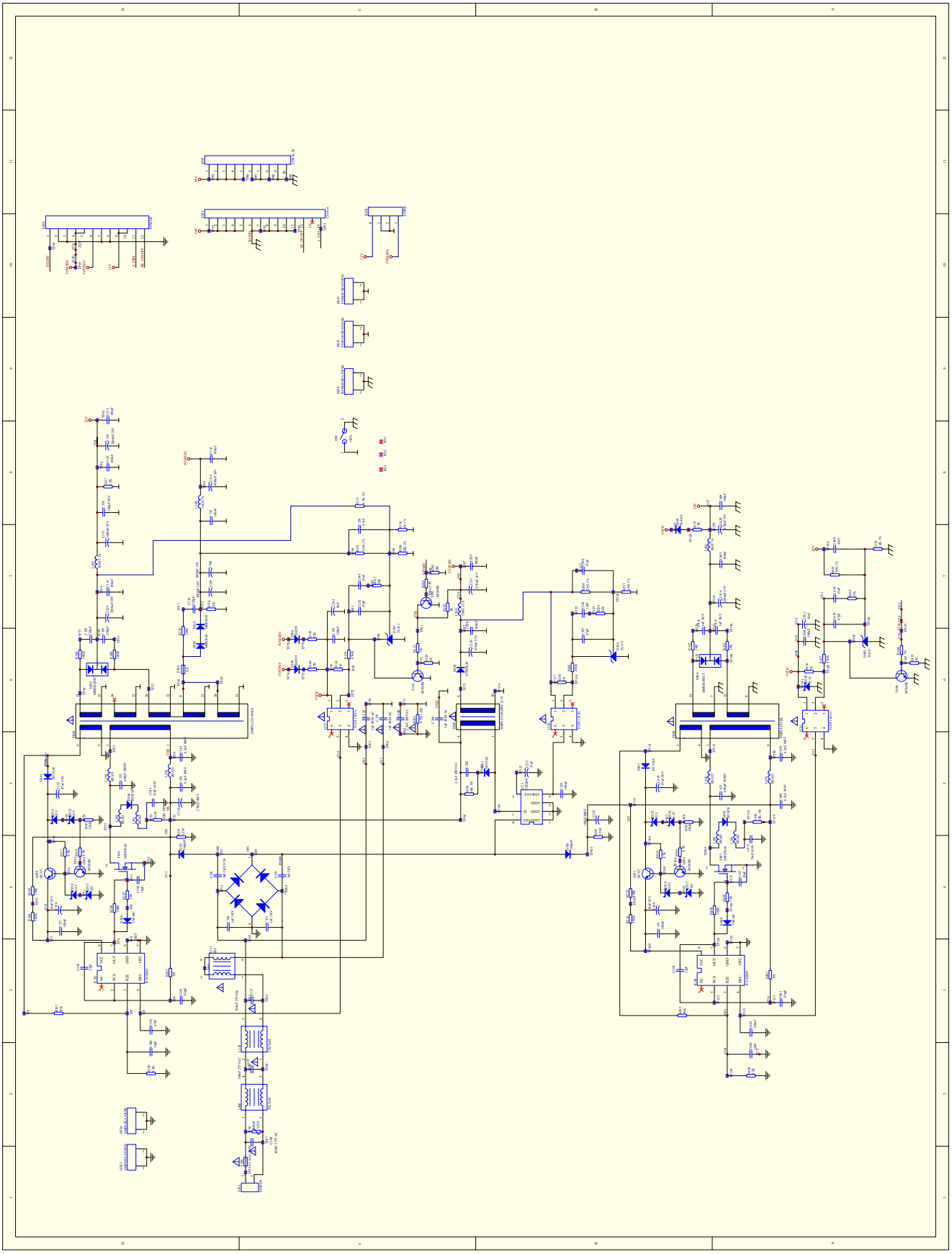Power Board