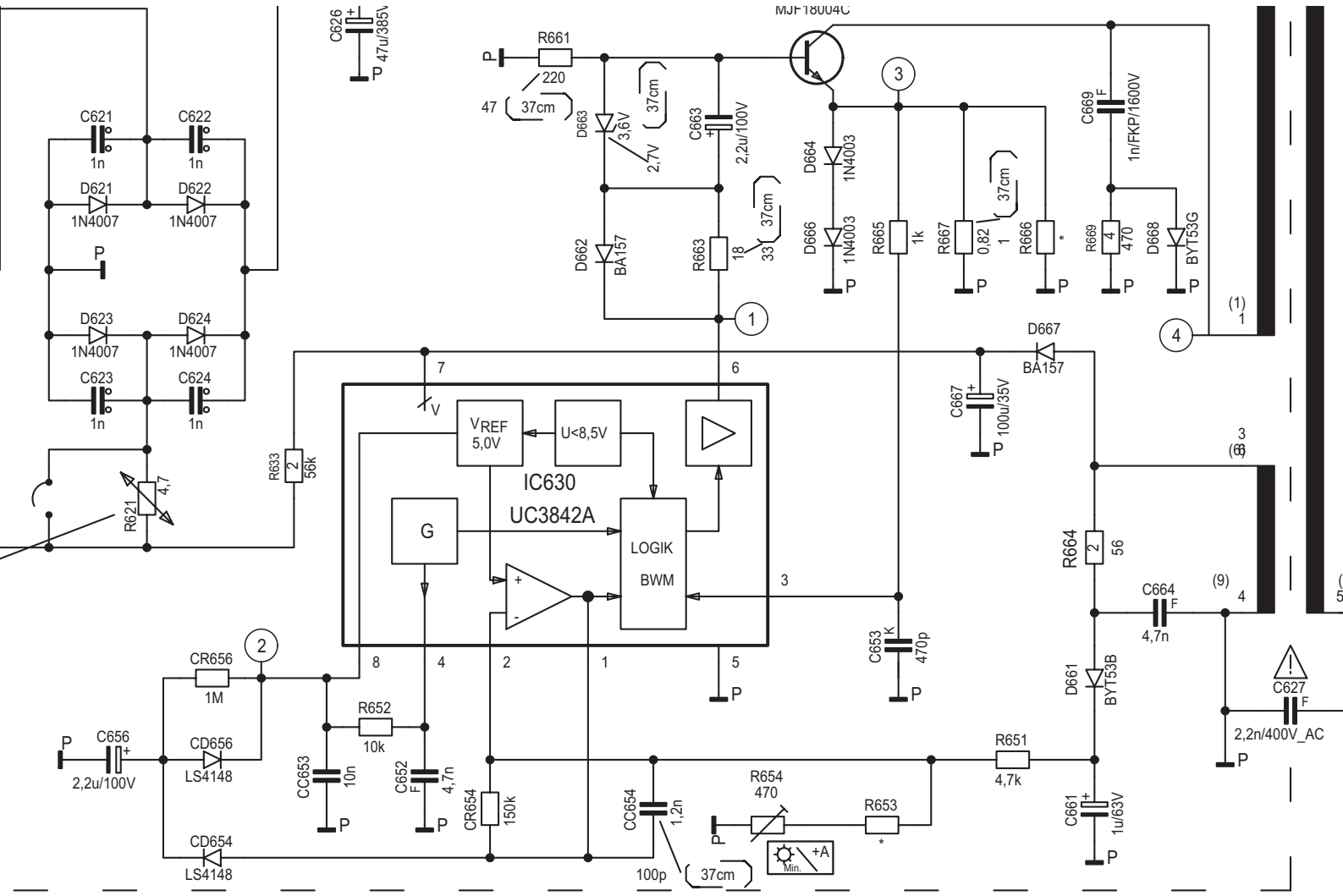
C626
47u/385V
R661
220
47
37cm
MJF18004C
C621
1n
C622
1n
D621
1N4007
D622
1N4007
D623
1N4007
D624
1N4007
C623
1n
C624
1n
R621
4,7
R633
56k
D663
3,6V
2,7V
C663
2,2u/100V
D662
BA157
R663
18
33
D664
1N4003
D666
1N4003
R665
1k
R667
0,82
R666
C669
1n/FKP/1600V
R669
470
D668
BYT53G
D667
BA157
C667
100u/35V
IC630
UC3842A
VREF
5,0V
U<8,5V
G
LOGIK
BWM
R664
56
C664
4,7n
C653
470p
D661
BYT53B
C627
2,2n/400V_AC
CR656
1M
R652
10k
C656
2,2u/100V
CD656
LS4148
CD654
LS4148
CC653
10n
C652
4,7n
CR654
150k
CC654
1,2n
100p
R654
470
R653
R651
4,7k
C661
1u/63V
+A
Min.