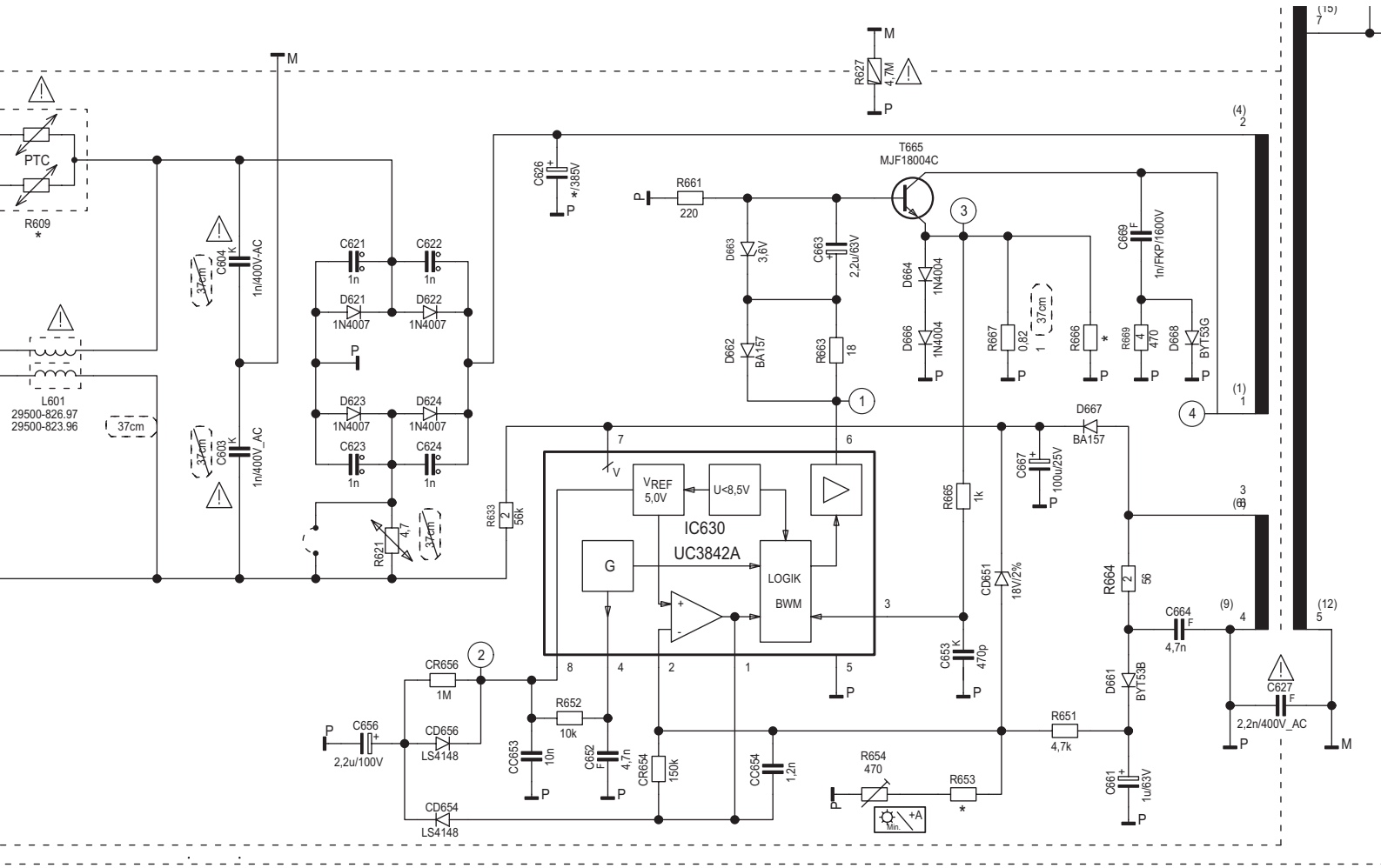
PTC
R609
*
L601
29500-826.97
29500-823.96
37cm
C604
1n/400V-AC
C603
1n/400V_AC
C621
1n
C622
1n
D621
1N4007
D622
1N4007
D623
1N4007
D624
1N4007
C623
1n
C624
1n
R621
4,7
M
P
C626
*/385V
R661
220
D663
3,6V
C663
2,2u/63V
D662
BA157
R663
18
T665
MJF18004C
D664
1N4004
D666
1N4004
R667
0,82
R666
*
C669
1n/FKP/1600V
R669
470
D668
BYT53G
R627
4,7M
D667
BA157
C667
100u/25V
R665
1k
CD651
18V/2%
R633
56k
IC630
UC3842A
VREF
5,0V
U<8,5V
G
LOGIK
BWM
C653
470p
R664
56
C664
4,7n
D661
BYT53B
C627
2,2n/400V_AC
R651
4,7k
C661
1u/63V
CR656
1M
C656
2,2u/100V
CD656
LS4148
CD654
LS4148
R652
10k
CC653
10n
C652
4,7n
CR654
150k
CC654
1,2n
R654
470
R653
*
Min.
+A