—— : +B SIGNAL LINE – – : -B SIGNAL LINE ⇨ : MAIN SIGNAL LINE

G POWER CIRCUIT(1)

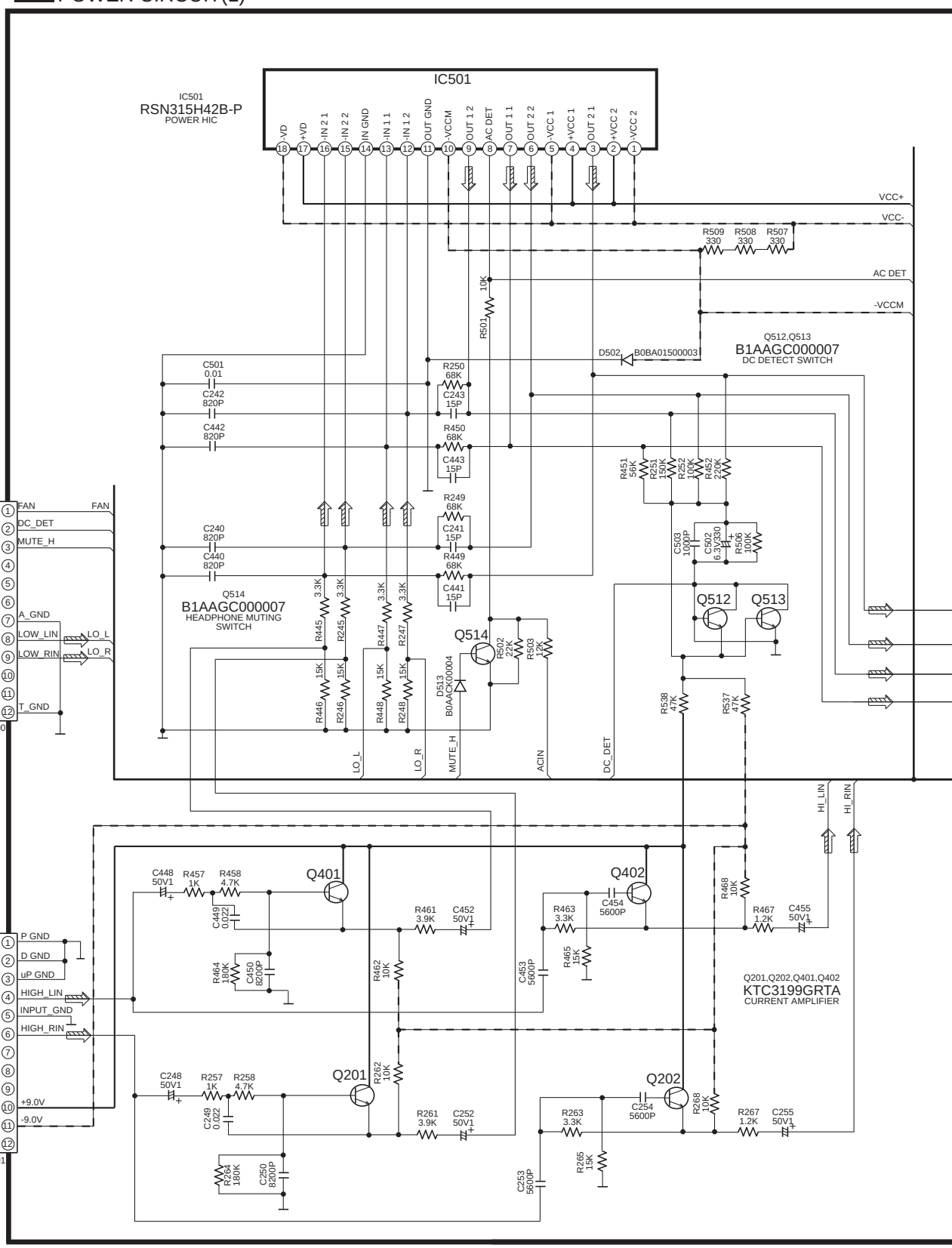

—— : +B SIGNAL LINE – – : -B SIGNAL LINE ⇨ : MAIN SIGNAL LINE
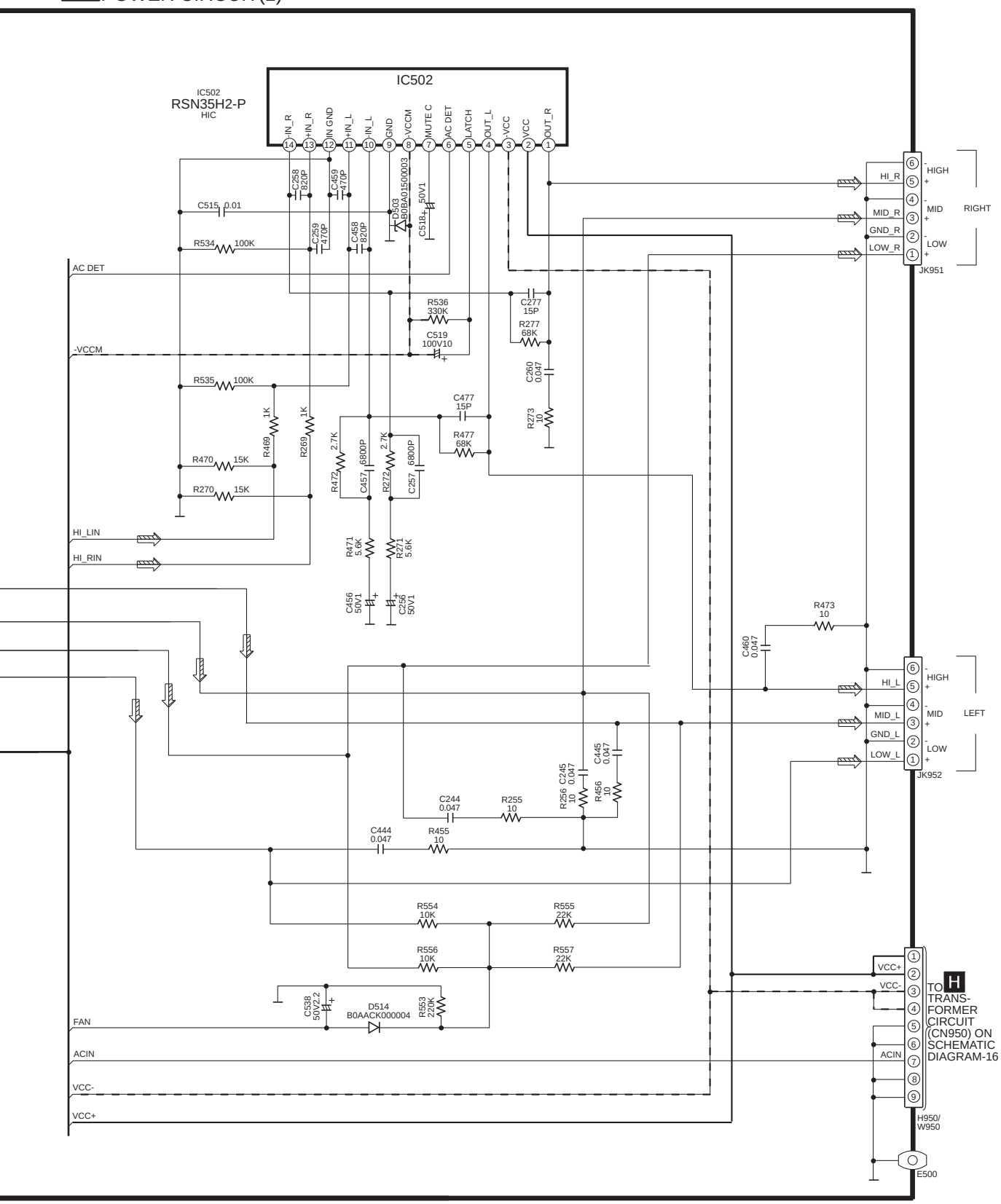
G POWER CIRCUIT(1)