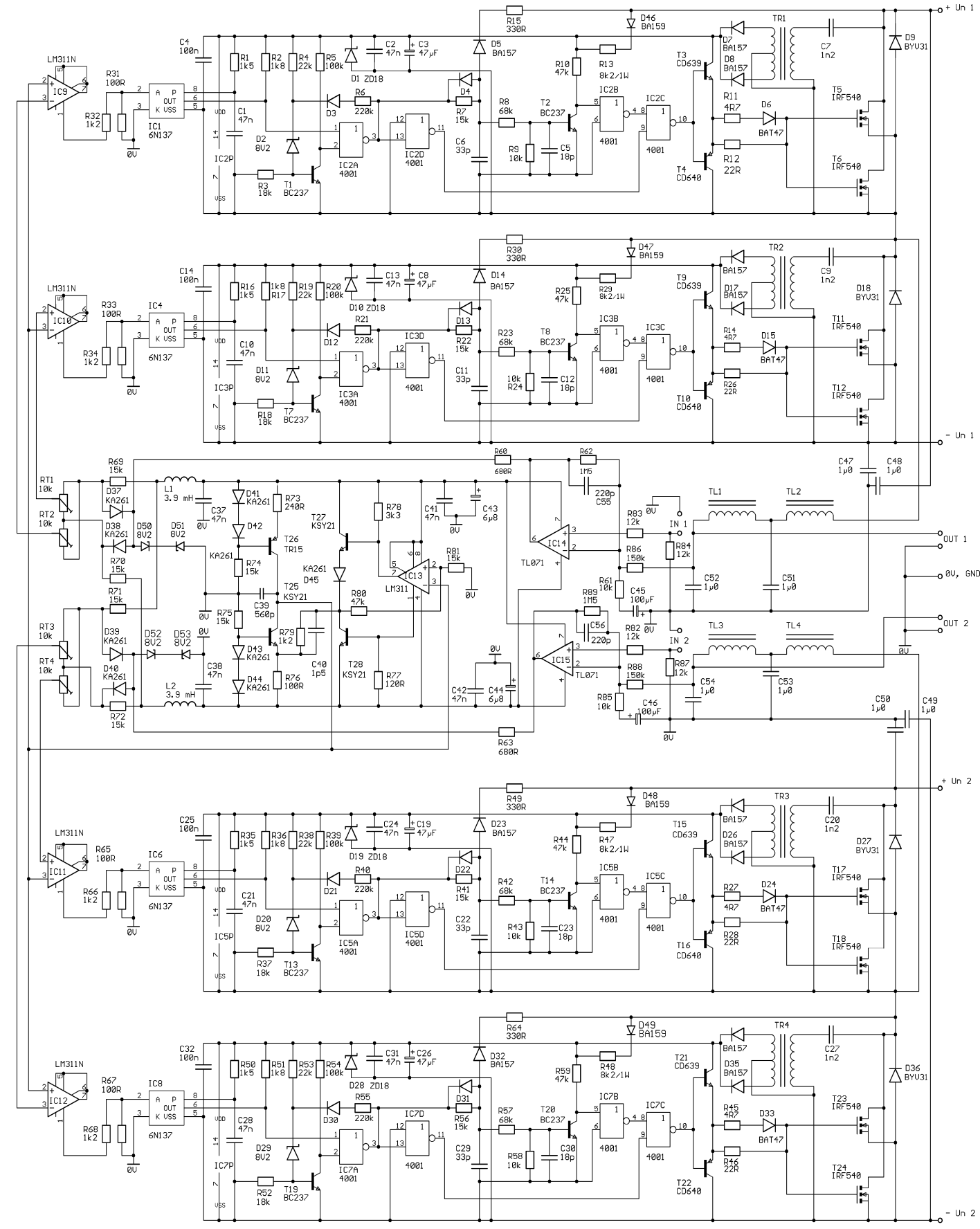

+ Un 1
- Un 1
+ Un 2
- Un 2
0V, GND
OUT 1
OUT 2
IN 1
IN 2
LM311N
IC9
IC10
IC11
IC12
IC1
IC4
IC6
IC8
6N137
R31 100R
R32 1k2
R33 100R
R34 1k2
R65 100R
R66 1k2
R67 100R
R68 1k2
C4 100n
C14 100n
C25 100n
C32 100n
R1 1k5
R2 1k8
R4 22k
R5 100k
R16 1k5
R17 1k8
R19 22k
R20 100k
R35 1k5
R36 1k8
R38 22k
R39 100k
R50 1k5
R51 1k8
R53 22k
R54 100k
D1 ZD18
D10 ZD18
D19 ZD18
D28 ZD18
C2 47n
C3 47µF
C13 47n
C8 47µF
C24 47n
C19 47µF
C31 47n
C26 47µF
R6 220k
R21 220k
R40 220k
R55 220k
D2 8V2
D11 8V2
D20 8V2
D29 8V2
D3
D12
D21
D30
R3 18k
R18 18k
R37 18k
R52 18k
T1 BC237
T7 BC237
T13 BC237
T19 BC237
IC2P
IC3P
IC5P
IC7P
IC2A 4001
IC3A 4001
IC5A 4001
IC7A 4001
IC2D 4001
IC3D 4001
IC5D 4001
IC7D 4001
D5 BA157
D14 BA157
D23 BA157
D32 BA157
R15 330R
R30 330R
R49 330R
R64 330R
D4
D13
D22
D31
R7 15k
R22 15k
R41 15k
R56 15k
C6 33p
C11 33p
C22 33p
C29 33p
R8 68k
R23 68k
R42 68k
R57 68k
T2 BC237
T8 BC237
T14 BC237
T20 BC237
R9 10k
R24 10k
R43 10k
R58 10k
C5 18p
C12 18p
C23 18p
C30 18p
R10 47k
R25 47k
R44 47k
R59 47k
R13 8k2/1W
R29 8k2/1W
R47 8k2/1W
R48 8k2/1W
IC2B 4001
IC3B 4001
IC5B 4001
IC7B 4001
IC2C 4001
IC3C 4001
IC5C 4001
IC7C 4001
D46 BA159
D47 BA159
D48 BA159
D49 BA159
TR1
TR2
TR3
TR4
D7 BA157
D8 BA157
D17 BA157
D26 BA157
D35 BA157
C7 1n2
C9 1n2
C20 1n2
C27 1n2
D9 BYU31
D18 BYU31
D27 BYU31
D36 BYU31
T3 CD639
T4 CD640
T9 CD639
T10 CD640
T15 CD639
T16 CD640
T21 CD639
T22 CD640
R11 4R7
R12 22R
R14 4R7
R26 22R
R27 4R7
R28 22R
R45 4R7
R46 22R
D6 BAT47
D15 BAT47
D24 BAT47
D33 BAT47
T5 IRF540
T6 IRF540
T11 IRF540
T12 IRF540
T17 IRF540
T18 IRF540
T23 IRF540
T24 IRF540
R60 680R
R62 1M5
R63 680R
C47 1µ0
C48 1µ0
C49 1µ0
C50 1µ0
C51 1µ0
C52 1µ0
C53 1µ0
C54 1µ0
C55 220p
C56 220p
R69 15k
R70 15k
R71 15k
R72 15k
RT1 10k
RT2 10k
RT3 10k
RT4 10k
D37 KA261
D38 KA261
D39 KA261
D40 KA261
D50 8V2
D51 8V2
D52 8V2
D53 8V2
L1 3.9 mH
L2 3.9 mH
C37 47n
C38 47n
D41 KA261
D42
D43 KA261
D44 KA261
R73 240R
R74 15k
R75 15k
R76 100R
T26 TR15
T25 KSY21
C39 560p
R79 1k2
C40 1p5
T27 KSY21
T28 KSY21
R78 3k3
R80 47k
R77 120R
C41 47n
C43 6µ8
C42 47n
C44 6µ8
R81 15k
IC13 LM311
IC14 TL071
IC15 TL071
R83 12k
R84 12k
R86 150k
R61 10k
R89 1M5
C45 100µF
R82 12k
R87 12k
R88 150k
R85 10k
C46 100µF
TL1
TL2
TL3
TL4