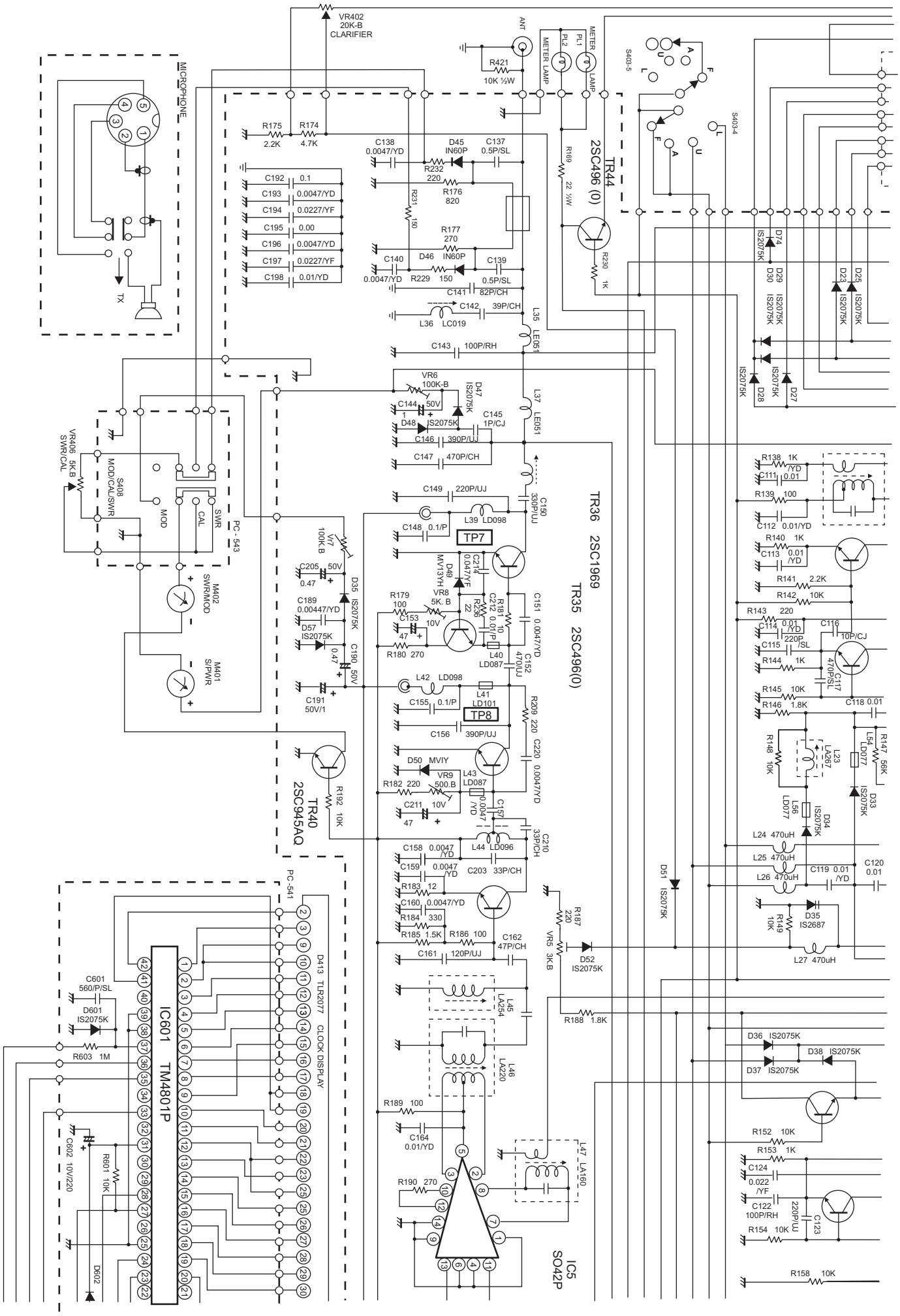
VR402
20K-B
CLARIFIER
ANT
R421
10K ½W
METER LAMP
METER
PL1
PL2
LAMP
S403-5
S403-4
MICROPHONE
TX
R175
2.2K
R174
4.7K
C138
0.0047/YD
D45
IN60P
C137
0.5P/SL
R232
220
R176
820
R231
150
R177
270
C140
0.0047/YD
D46
IN60P
C139
R229
150
0.5P/SL
C141
82P/CH
C142
39P/CH
L36
LC019
L35
LE051
C143
100P/RH
C192
0.1
C193
0.0047/YD
C194
0.0227/YF
C195
0.00
C196
0.0047/YD
C197
0.0227/YF
C198
0.01/YD
TR44
2SC496 (0)
R169
22 ½W
R230
1K
D74
IS2075K
D29
IS2075K
D30
IS2075K
D23
IS2075K
D25
IS2075K
D28
IS2075K
D27
VR6
100K-B
C144
1
50V
D47
IS2075K
D48
IS2075K
C145
1P/CJ
C146
390P/UJ
C147
470P/CH
L37
LE051
VR406
5K.B
SWR/CAL
S408
MOD/CAL/SWR
MOD
CAL
SWR
PC - 543
M402
SWR/MOD
M401
S/PWR
C149
220P/UJ
C150
330P/UJ
L39
LD098
C148
0.1/P
TP7
VR7
100K.B
C205
50V
0.47
D49
MV13YH
C214
0.0047/YF
C189
0.00447/YD
D35
IS2075K
D57
IS2075K
0.47
C190
50V
C191
50V/1
R179
100
VR8
5K. B
C153
47
10V
R180
270
R236
22
R181
10
C212
0.01/P
L40
LD087
C151
0.0047/YD
C152
470/UJ
TR36
2SC1969
TR35
2SC496(0)
L42
LD098
L41
LD101
C155
0.1/P
TP8
C156
390P/UJ
R209
220
C220
0.0047/YD
D50
MVIY
VR9
500.B
R182
220
L43
LD087
C211
10V
47
0.0047
/YD
C157
TR40
2SC945AQ
R192
10K
C158
0.0047
/YD
L44
LD096
C210
33P/CH
C159
0.0047
/YD
C203
33P/CH
R183
12
C160
0.0047/YD
R184
330
R185
1.5K
R186
100
C162
47P/CH
C161
120P/UJ
R187
220
VR5
3K.B
D52
IS2075K
D51
IS2075K
R188
1.8K
L45
LA254
L46
LA220
R189
100
C164
0.01/YD
R190
270
L47
LA160
IC5
SO42P
PC -541
D413
TLR2077
CLOCK DISPLAY
IC601
TM4801P
C601
560/P/SL
D601
IS2075K
R603
1M
C602
10V/220
R601
10K
D602
R138
1K
/YD
C111
0.01
R139
100
C112
0.01/YD
R140
1K
C113
0.01
/YD
R141
2.2K
R142
10K
R143
220
C114
0.01
/YD
C116
10P/CJ
C115
220P
/SL
R144
1K
C117
470P/SL
R145
10K
R146
1.8K
C118
0.01
R148
10K
L23
LA267
L54
LD077
R147
56K
D33
IS2075K
L56
LD077
D34
IS2075K
L24
470uH
L25
470uH
L26
470uH
C119
0.01
/YD
C120
0.01
R149
10K
D35
IS2687
L27
470uH
D36
IS2075K
D38
IS2075K
D37
IS2075K
R152
10K
R153
1K
C124
0.022
/YF
C122
100P/RH
220P/UJ
C123
R154
10K
R158
10K