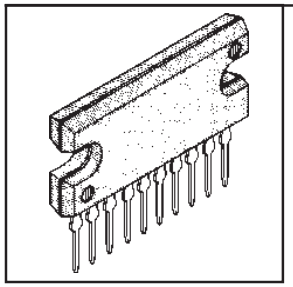

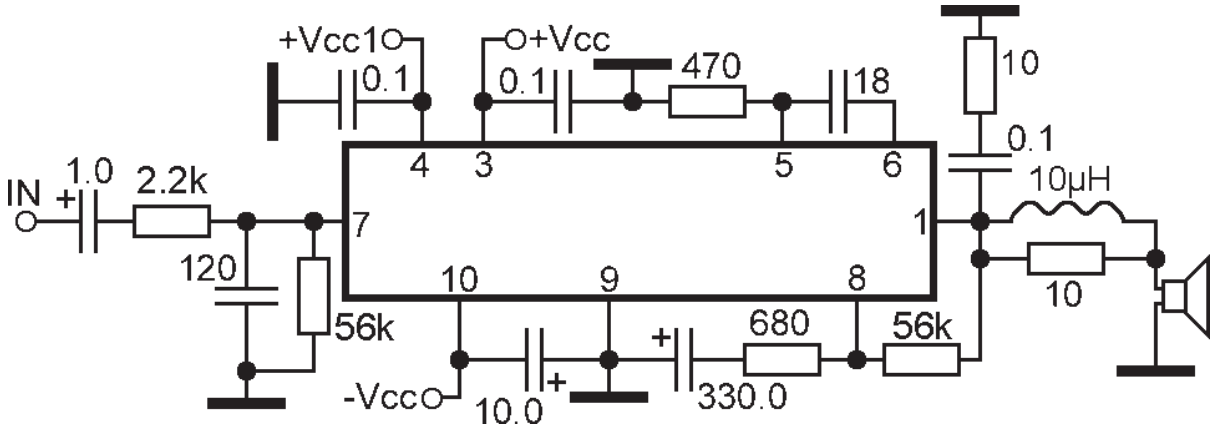

ECG1724
HA1350
HA1370
µPC1188H
NTE1724
SK7650