# HP LaserJet Professional M1132 MFP

# Self Test / Configuration

## Product Information

| | |
|---|---|
| Product Name: | |
| HP LaserJet Professional M1132 MFP | |
| Formatter Number: | QH69D8Z |
| Product Serial Number: | CNG9D85NFK |
| Service ID: | 17245 |
| Firmware datecode: | 20110526 |
| Software driver version: | 20110824 |
| Max print quality: | FastRes 1200 |
| Total Memory: | 8 MBytes |
| Available Memory: | 6 MBytes |

## Product Settings

| | |
|---|---|
| Language | = English |
| IO timeout | = 480 |
| Location | = USA |

## Paper Settings

| | |
|---|---|
| Default Paper Size | = A4 |
| Default Paper Type | = Plain |
| Print Density | = 3 |

## Copy Settings

| | |
|---|---|
| Default Copy Quality | = Text |
| Default Copy Light/Dark | = <-----*-----> |
| Default Copy Number Of Copies | = 1 |
| Default Copy Reduce/Enlarge | = Original=100% |

## Page Counts

| | |
|---|---|
| Pages scanned to copy | = 21 |
| Monochrome pages printed from copy | = 21 |
| Total pages printed | = 13415 |
| Pages scanned to host | = 1794 |
| Total Input Jams | = 4 |
| Total Output Jams | = 2 |
| Total Cartridge Jams | = 7 |
| Pages mispicked in printer | = 0 |
| Narrow Media Page Count | = 0 |

## Status Log

| Code | Page |
|---|---|
| 10.3100 | 13394 |
| 10.3100 | 13341 |
| 10.3100 | 13216 |
| 10.3100 | 13159 |
| 10.3100 | 12974 |
| 10.3100 | 12834 |
| 10.3100 | 12818 |
| 13.0000 | 12818 |
| 10.3100 | 12780 |
| 13.0000 | 12780 |

# [illegible] 150 printer

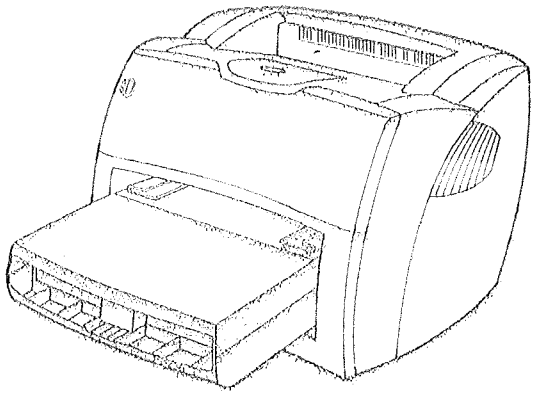

[illegible] price for value
[illegible]r

[illegible]r business -
[illegible] of your business
[illegible] quality output
[illegible] of 17 ppm and first
[illegible]nks to the
[illegible]
[illegible] support for PCL5e
[illegible]s many businesses
[illegible]
[illegible]ons help you set up
[illegible]

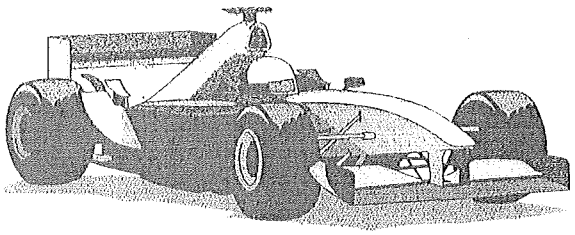

## performance

[illegible]s for all your
[illegible]

[illegible]re designed
[illegible]nters for optimum
[illegible]
[illegible]g supply innovations
[illegible]perience
[illegible]re backed by a
[illegible]hp's reputation for
[illegible]
[illegible]ssional-quality
[illegible] the way you work

[illegible]w.hp.com

hp®
invent

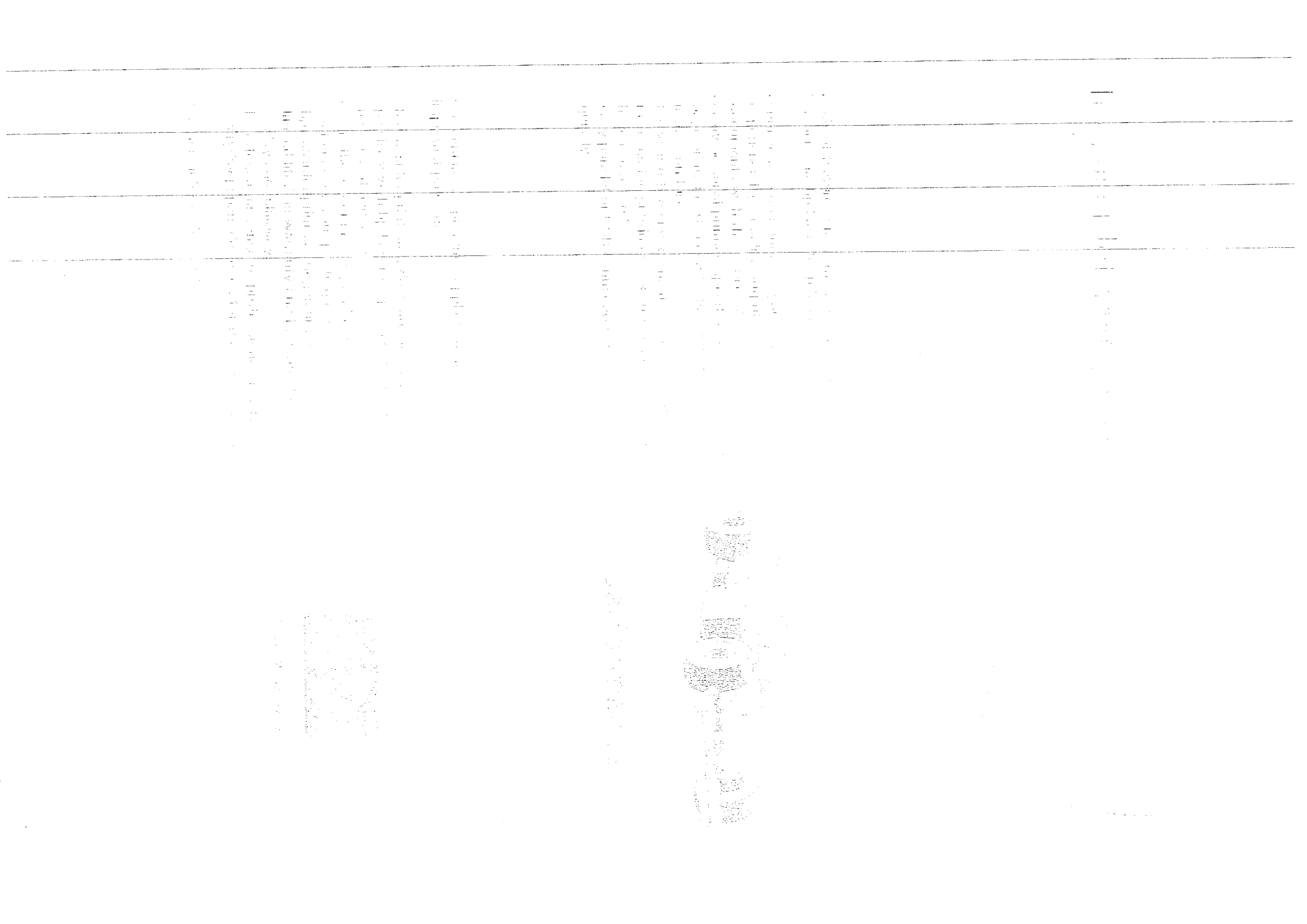

# hp LaserJet 1150 printer

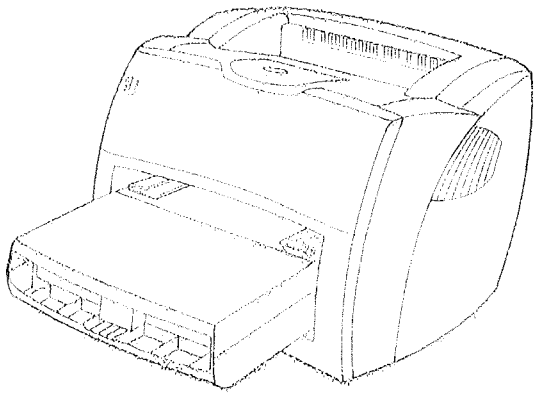

a mix of features and attractive price for value
in a personal hp LaserJet printer

- printing as professional as your business - experience high quality output of your business documents with the 1200 dpi quality output
- enjoy personal printing speed of 17 ppm and first page prints in 10 seconds thanks to the instant on fuser
- fits your office environment - support for PCL5e matches the printing standards many businesses have established
- easy parallel or USB connections help you set up quickly

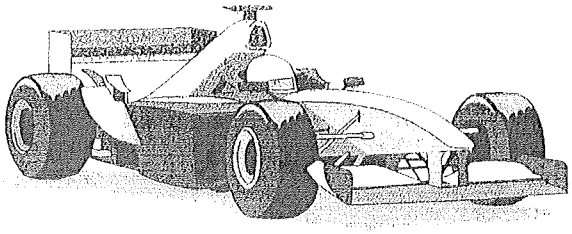

**performance**

use genuine hp printing supplies for all your important projects

- hp LaserJet print cartridges are designed precisely with hp LaserJet printers for optimum results and reliability
- hp is the order in new printing supply innovations that enhance your printing experience
- hp LaserJet print cartridges are backed by a limited lifetime warranty and hp's reputation for quality and reliability
- hp offers a full range of professional-quality everyday papers designed for the way you work

for more information, visit www.hp.com

hp®

invent