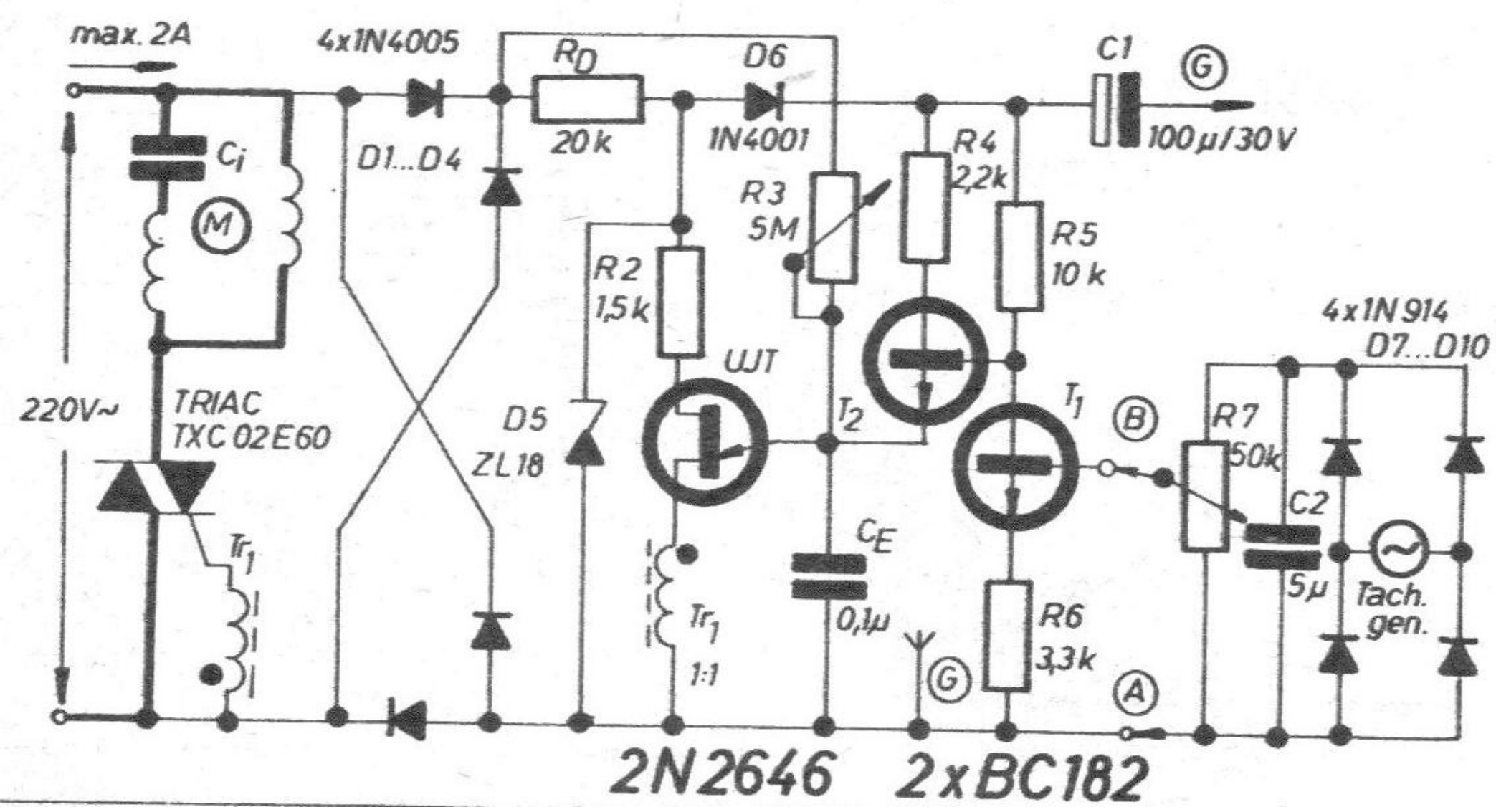
max. 2A
4x1N4005
R_D
20k
D6
1N4001
C1
100µ/30V
G
C_i
M
D1...D4
R3
5M
R4
2,2k
R5
10k
R2
1,5k
UJT
4x1N914
D7...D10
220V~
TRIAC
TXC 02E60
D5
ZL18
T_2
T_1
B
R7
50k
C2
5µ
Tr_1
C_E
0,1µ
Tach.
gen.
R6
3,3k
1:1
G
A
2N2646
2xBC182