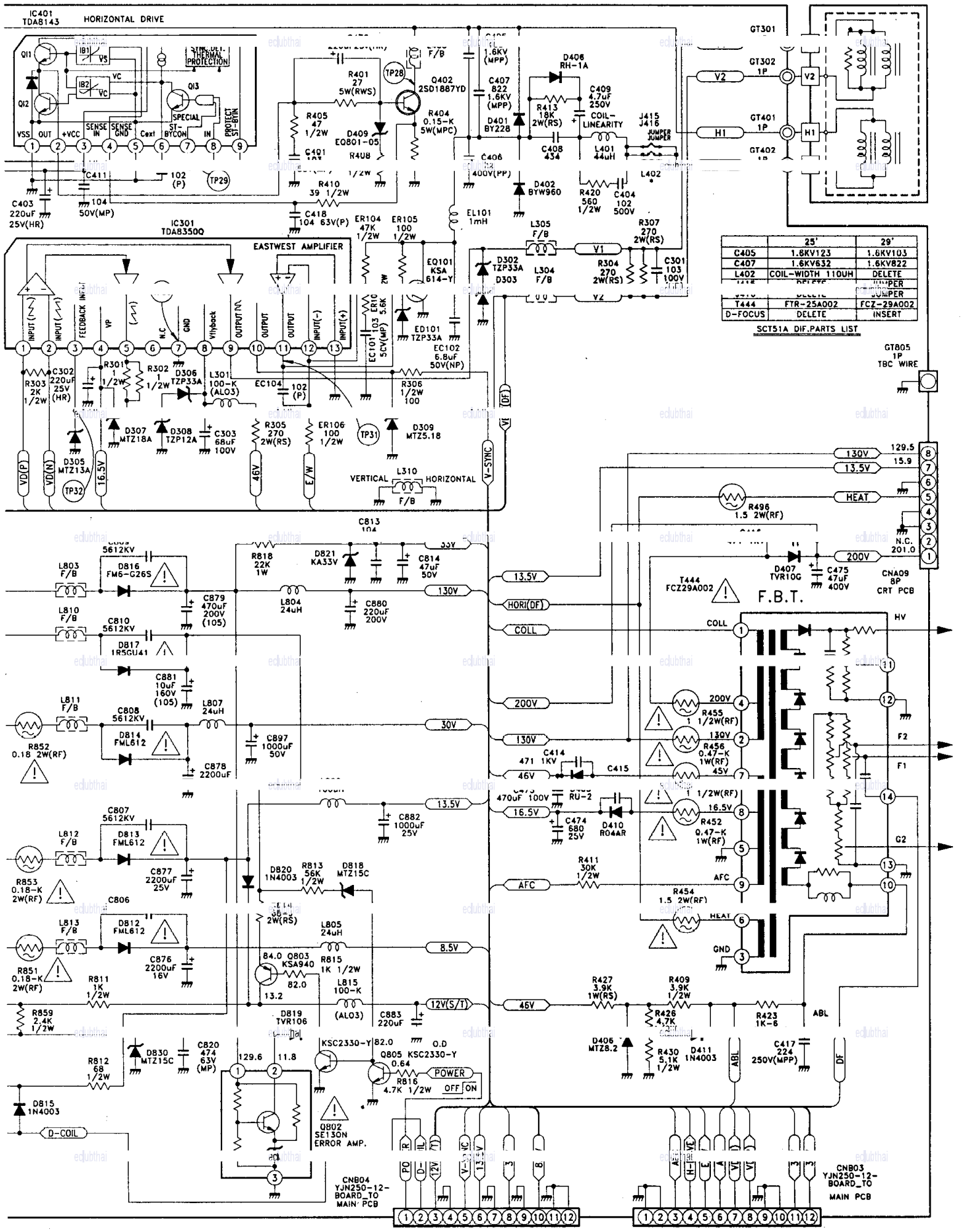

	25'	29'
C405	1.6KV123	1.6KV103
C407	1.6KV632	1.6KV822
L402	COIL-WIDTH 110UH	DELETE
[illegible]	DELETE	JUMPER
[illegible]	DELETE	JUMPER
T444	FTR-25A002	FCZ-29A002
D-FOCUS	DELETE	INSERT