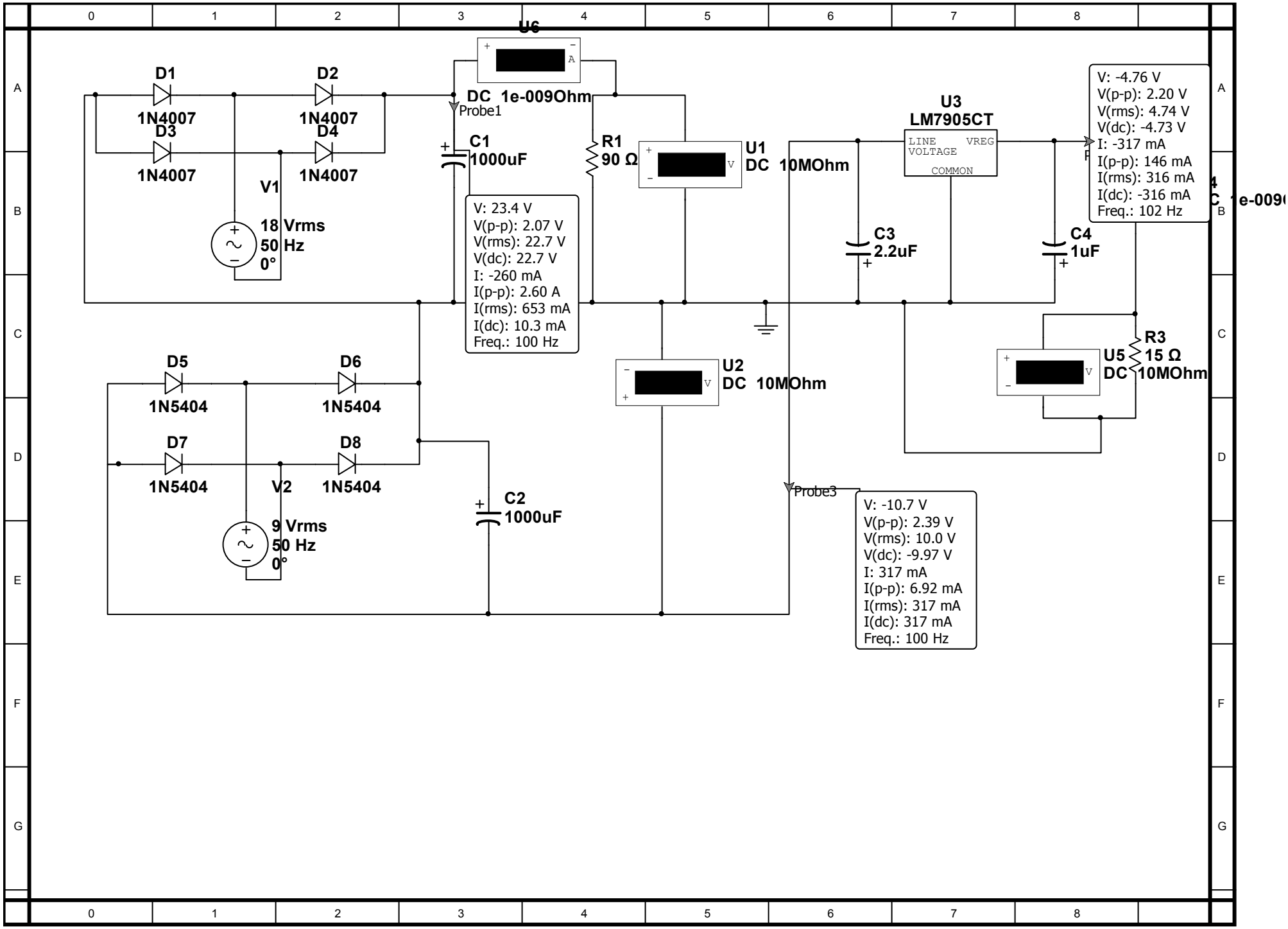
U6
DC 1e-009Ohm
Probe1
D1
1N4007
D2
1N4007
D3
1N4007
D4
1N4007
V1
18 Vrms
50 Hz
0°
C1
1000uF
V: 23.4 V
V(p-p): 2.07 V
V(rms): 22.7 V
V(dc): 22.7 V
I: -260 mA
I(p-p): 2.60 A
I(rms): 653 mA
I(dc): 10.3 mA
Freq.: 100 Hz
R1
90 Ω
U1
DC 10MOhm
U2
DC 10MOhm
U3
LM7905CT
LINE VOLTAGE
VREG
COMMON
C3
2.2uF
C4
1uF
V: -4.76 V
V(p-p): 2.20 V
V(rms): 4.74 V
V(dc): -4.73 V
I: -317 mA
I(p-p): 146 mA
I(rms): 316 mA
I(dc): -316 mA
Freq.: 102 Hz
U5
DC 10MOhm
R3
15 Ω
D5
1N5404
D6
1N5404
D7
1N5404
D8
1N5404
V2
9 Vrms
50 Hz
0°
C2
1000uF
Probe3
V: -10.7 V
V(p-p): 2.39 V
V(rms): 10.0 V
V(dc): -9.97 V
I: 317 mA
I(p-p): 6.92 mA
I(rms): 317 mA
I(dc): 317 mA
Freq.: 100 Hz