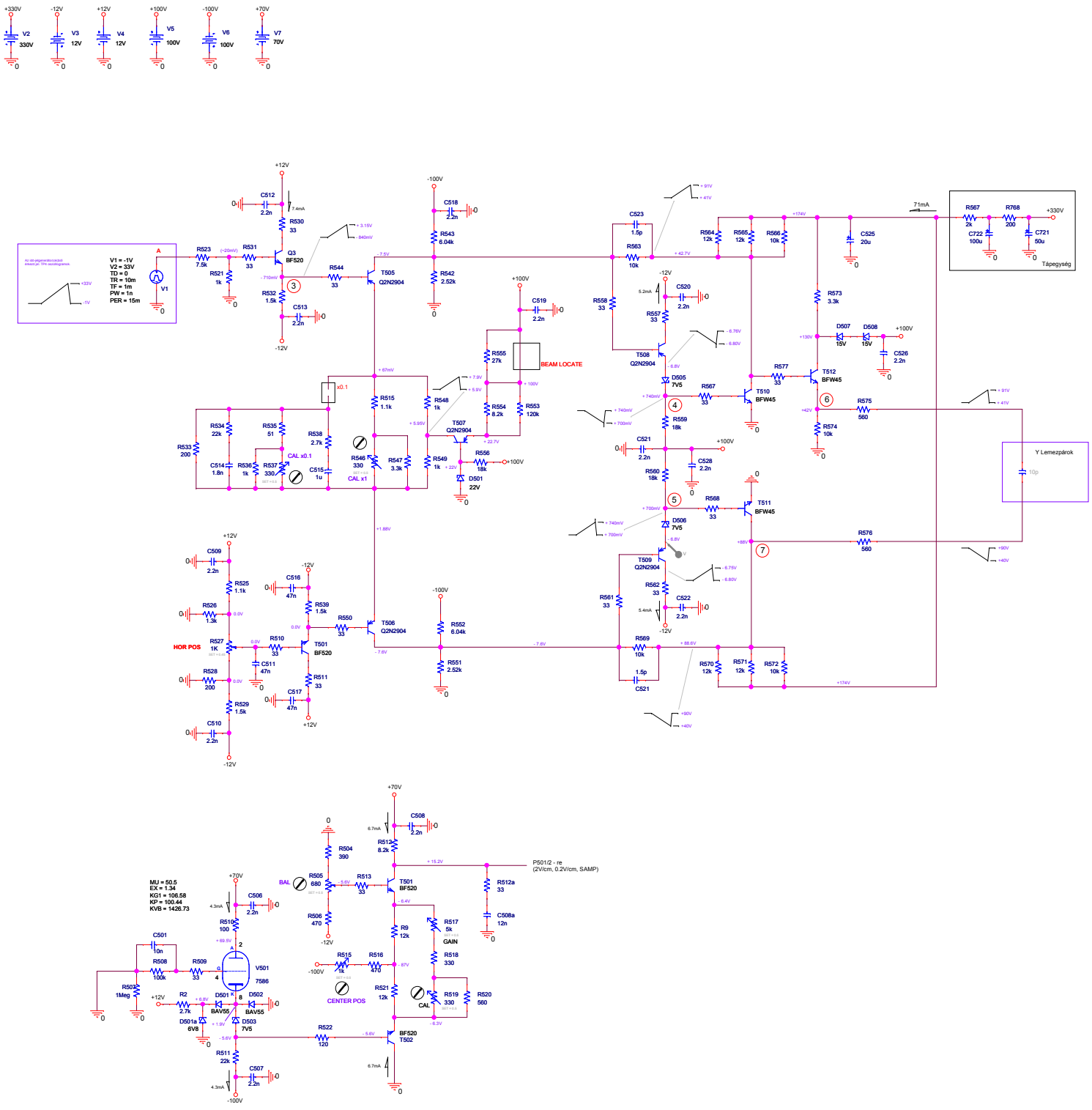
V1 = -1V
V2 = 33V
TD = 0
TR = 10m
TF = 1m
PW = 15m
PER = 15m
BEAM LOCATE
CAL x0.1
CAL x1
HOR POS
BAL
CENTER POS
CAL
GAIN
Y Lemezpárok
Tápegység
71mA
P501/2 - re
(2V/cm, 0.2V/cm, SAMP)
MU = 50.5
EX = 1.34
KG1 = 106.58
KP = 100.44
KVB = 1426.73