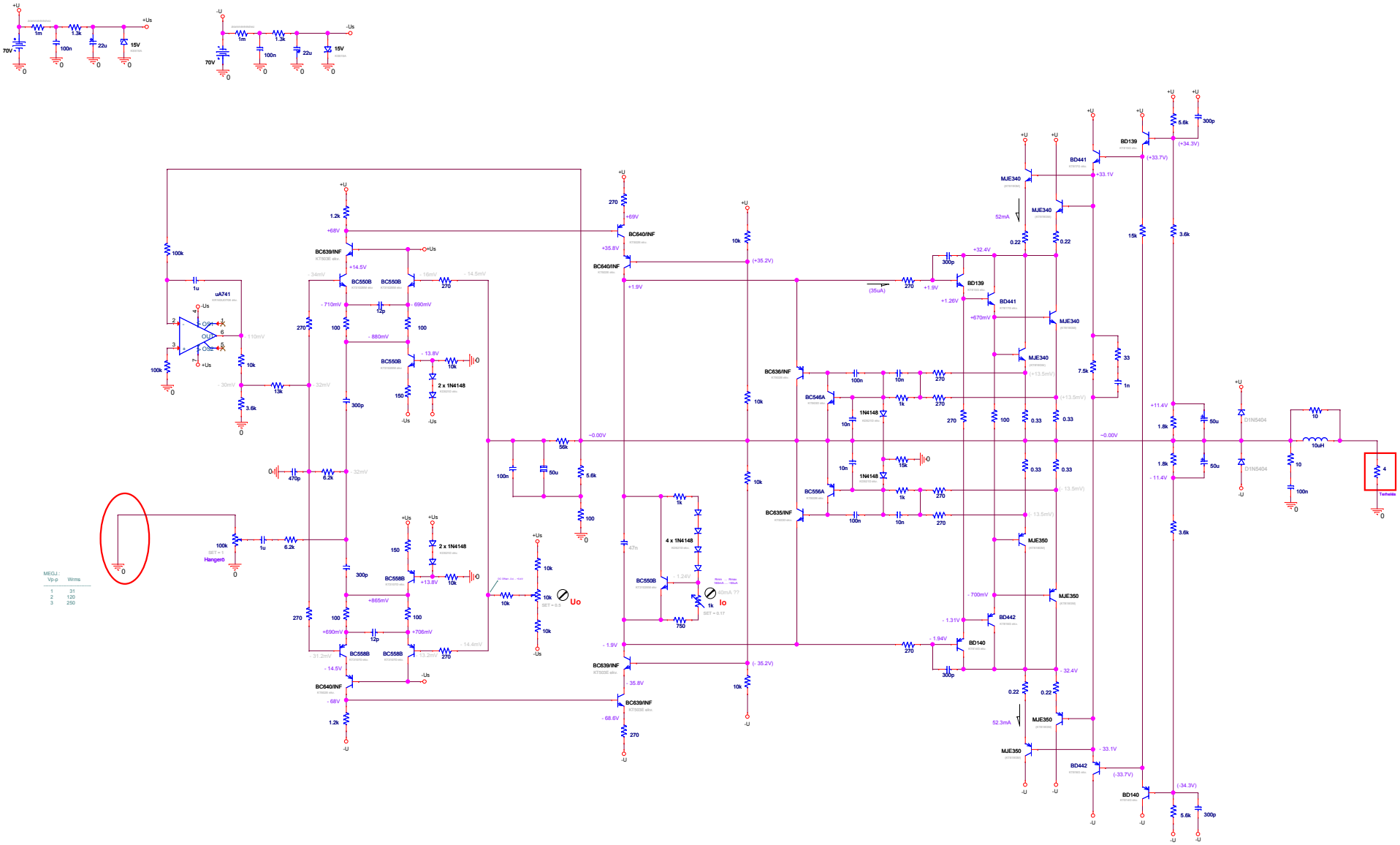
+U
+Us
70V
1m
100n
1.3k
22u
15V
-U
-Us
uA741
OUT
Hangerő
SET = 1
MEGJ.:
Vp-p Wrms
1 31
2 120
3 250
BC639/INF
BC640/INF
BC550B
BC558B
2 x 1N4148
4 x 1N4148
BC546A
BC556A
BC636/INF
BC635/INF
BD139
BD441
BD140
BD442
MJE340
MJE350
D1N5404
10uH
Terhelés
Uo
Io
mA ??
SET = 0.17
SET = 2.5
52mA
52.3mA
(35uA)
(+35.2V)
(-35.2V)
(+34.3V)
(-34.3V)
(+33.7V)
(-33.7V)
+33.1V
-33.1V
+69V
-68.6V
+68V
-68V
+35.8V
-35.8V
+1.9V
-1.9V
+32.4V
-32.4V
+1.26V
-1.31V
+670mV
-700mV
+11.4V
-11.4V
-0.00V