+1.2VALW TO +1.2V_HT

C:Chg.Q14,Q41 part to reduce low Rdson part.

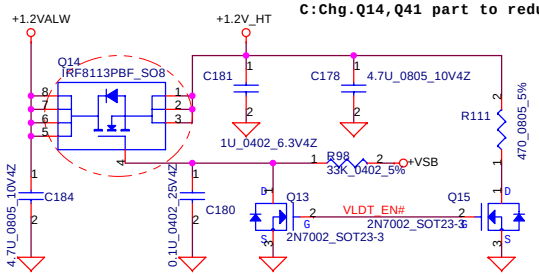

+1.8V TO +1.8VS

B:Q18 and Q36, need to link "SB548000310"
C:Q14 and Q41, change part to reduce Rds(on) to improve PWR drop.
MP: Update R137 and R286 from 22K to 330K and C247 and C457 from 0.1U Y5V to 0.01U X7R to meet PWR SEQ, and update C180 and C385 to 25V to meet PWR request.

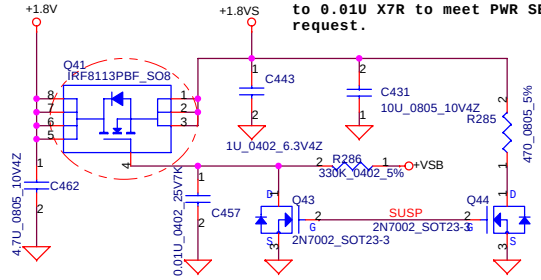

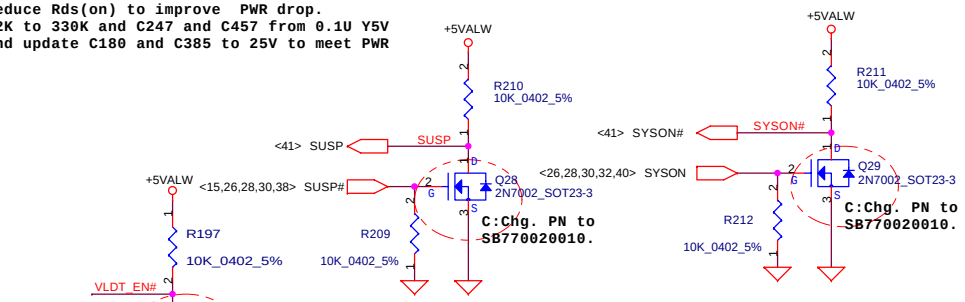

+3VALW TO +3VS

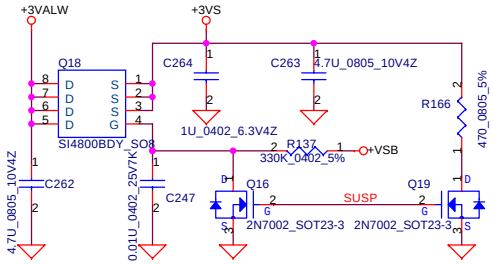

+5VALW TO +5VS

C:Chg.Q13,Q15,Q16,Q19,Q34,Q35,Q43,Q44 PN to SB770020010.

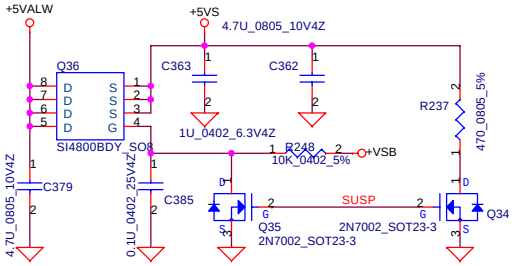

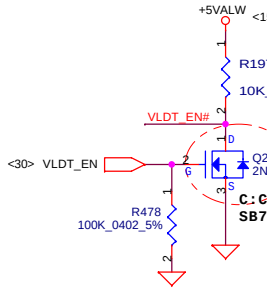

C:Chg. PN to SB770020010.

B:Add PD 100K bec'z KB926 is tri-state pin.

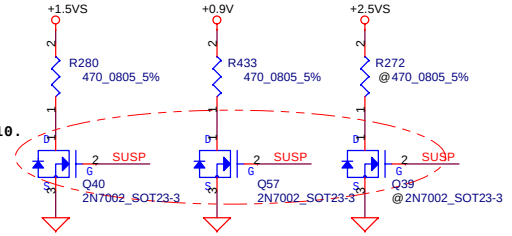

C:Chg. PN to SB770020010.

B:Chg. to POP material for discharge.

+3VALW TO +3V_SB

B:1.Chg. PWR SW Q132 and Q133 from AO4422 to SI3456BDV
2.Remove Energy Star 4.0 function.

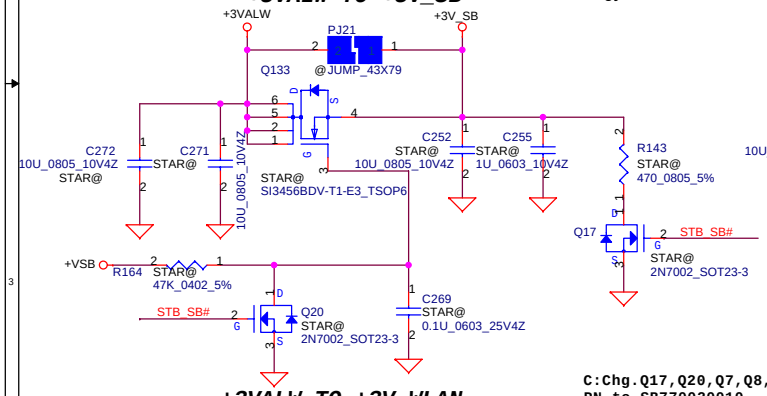

+3VALW TO +3V_LAN

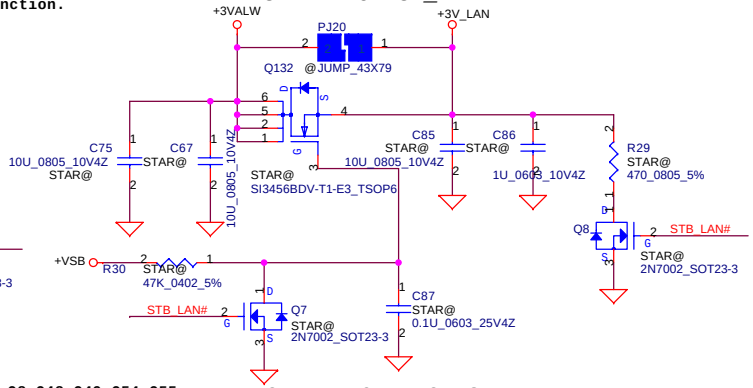

B:Remove Energy Star 4.0 function.

C:Chg. PN to SB770020010.

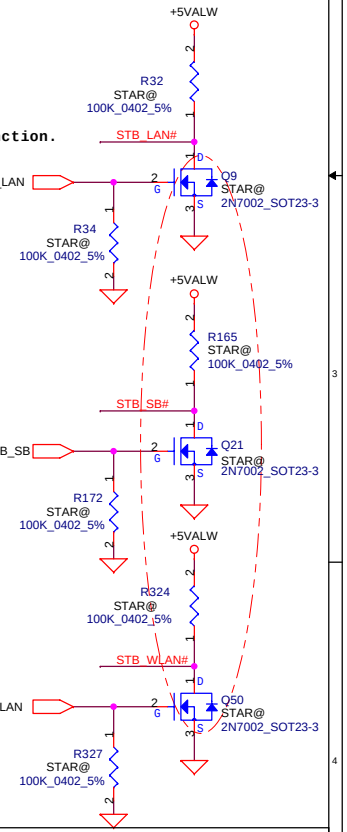

C:Chg.Q17,Q20,Q7,Q8,Q48,Q49,Q54,Q55 PN to SB770020010.

+3VALW TO +3V_WLAN

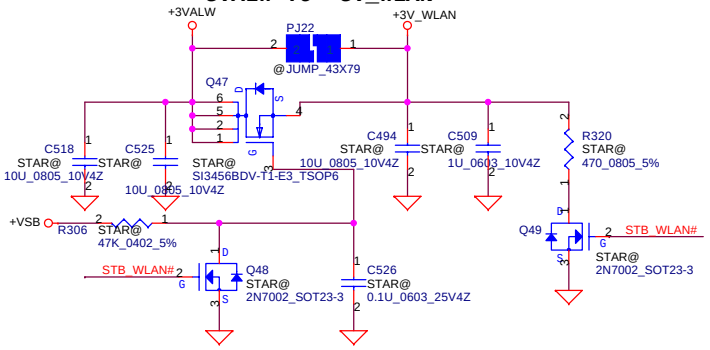

+1.2VALW TO +1.2V_SB

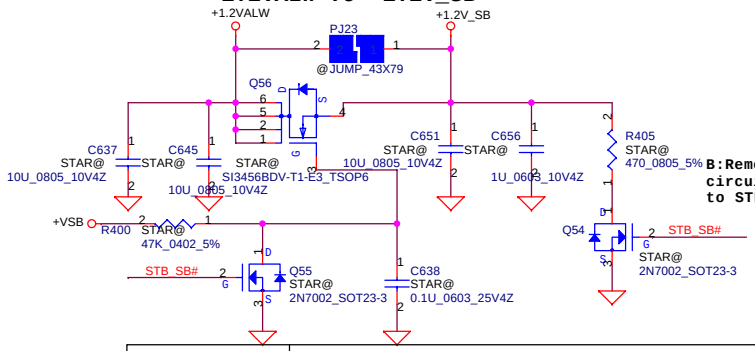

B:Remove STB_12SB# control circuit and chagne control signl to STB_SB#

Security Classification	Compal Secret Data		
Issued Date	2007/5/4	Deciphered Date	2008/5/4

THIS SHEET OF ENGINEERING DRAWING IS THE PROPRIETARY PROPERTY OF COMPAL ELECTRONICS, INC. AND CONTAINS CONFIDENTIAL AND TRADE SECRET INFORMATION. THIS SHEET MAY NOT BE TRANSFERED FROM THE CUSTODY OF THE COMPETENT DIVISION OF R&D DEPARTMENT EXCEPT AS AUTHORIZED BY COMPAL ELECTRONICS, INC. NEITHER THIS SHEET NOR THE INFORMATION IT CONTAINS MAY BE USED BY OR DISCLOSED TO ANY THIRD PARTY WITHOUT PRIOR WRITTEN CONSENT OF COMPAL ELECTRONICS, INC.

Compal Electronics, Inc.

Title: DC-DC INTERFACE

Size: B | Document Number: IALAA-Minnesota10A LA3631P | Rev: 1A

Date: Monday, May 14, 2007 | Sheet 35 of 45

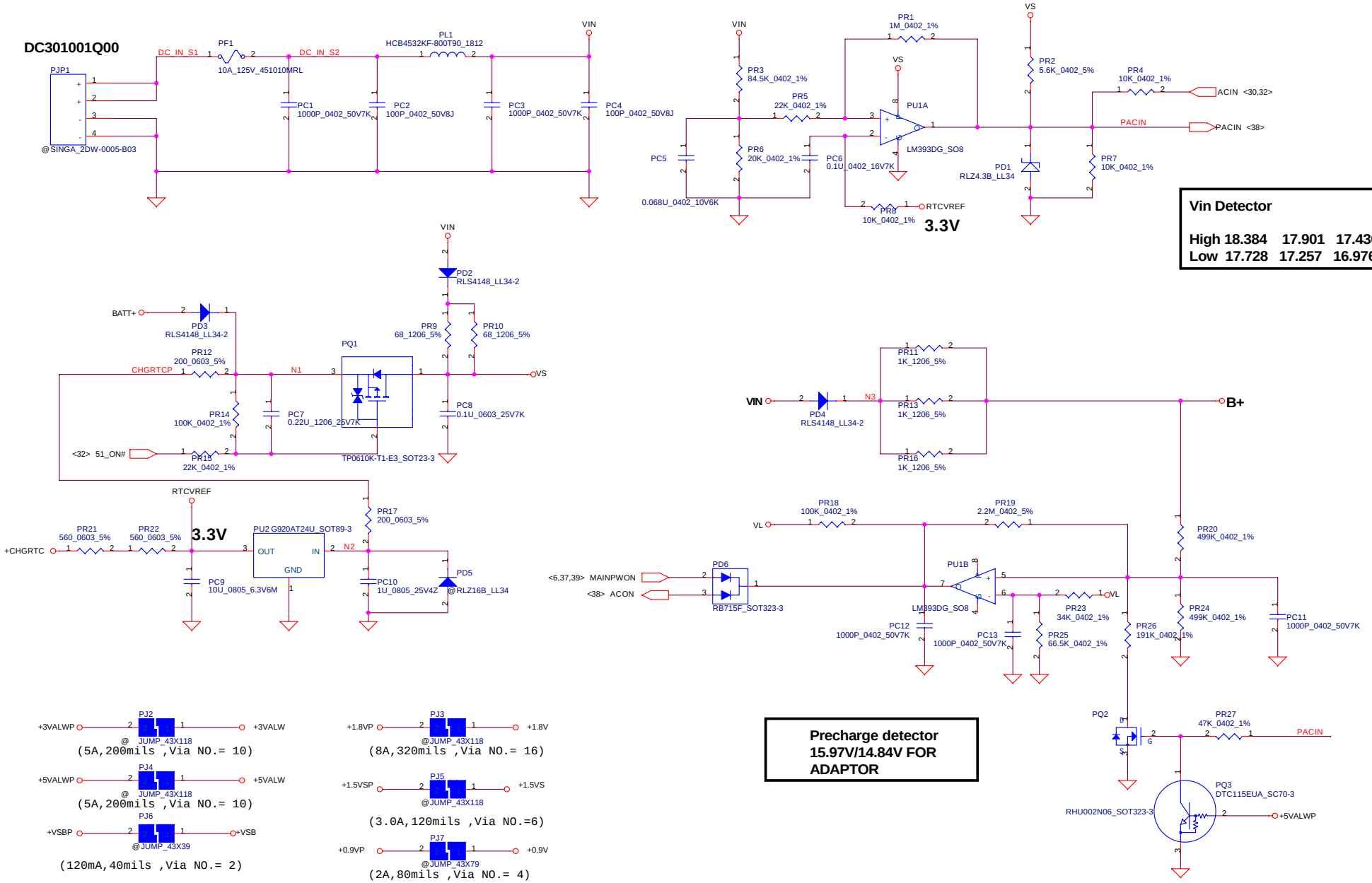

Security Classification	Compal Secret Data		
Issued Date	2007/5/4	Deciphered Date	2008/5/4

THIS SHEET OF ENGINEERING DRAWING IS THE PROPRIETARY PROPERTY OF COMPAL ELECTRONICS, INC. AND CONTAINS CONFIDENTIAL AND TRADE SECRET INFORMATION. THIS SHEET MAY NOT BE TRANSFERRED FROM THE CUSTODY OF THE COMPETENT DIVISION OF R&D DEPARTMENT EXCEPT AS AUTHORIZED BY COMPAL ELECTRONICS, INC. NEITHER THIS SHEET NOR THE INFORMATION IT CONTAINS MAY BE USED BY OR DISCLOSED TO ANY THIRD PARTY WITHOUT PRIOR WRITTEN CONSENT OF COMPAL ELECTRONICS, INC.

Compal Electronics, Inc.

Title: DCIN & DETECTOR

Size | Document Number: IALAA-Minnesota10A LA3631P | Rev 1A

Date: Monday, May 14, 2007 | Sheet 36 of 45

PH1 under CPU botten side :
CPU thermal protection at 92 degree C
Recovery at 56 degree C

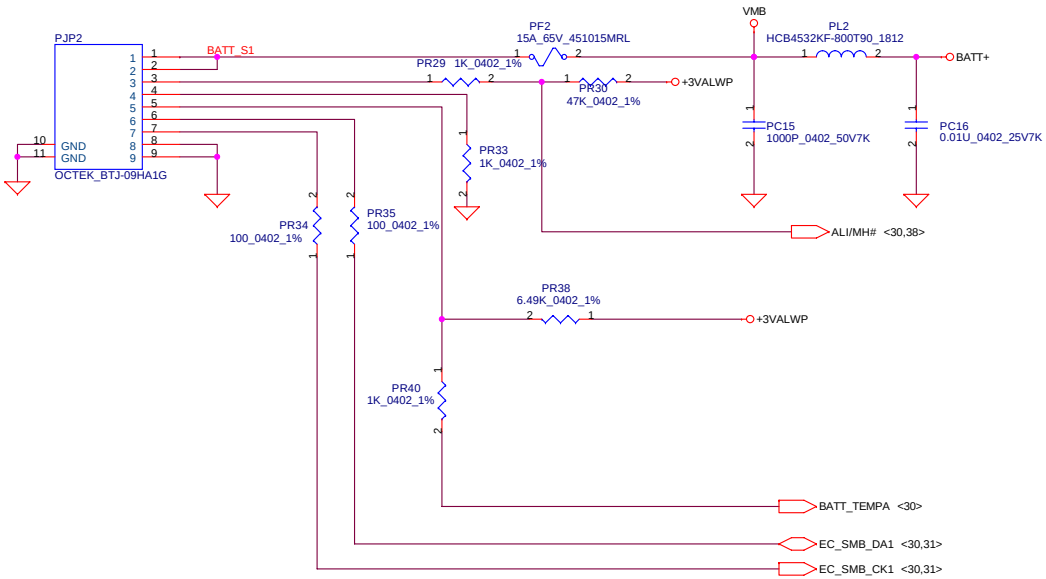

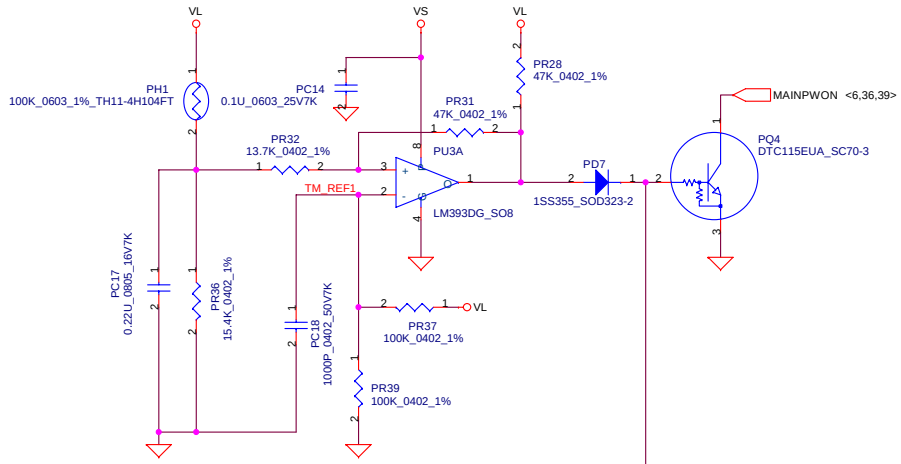

PH2 near main Battery CONN :
BAT. thermal protection at 92 degree C
Recovery at 56 degree C

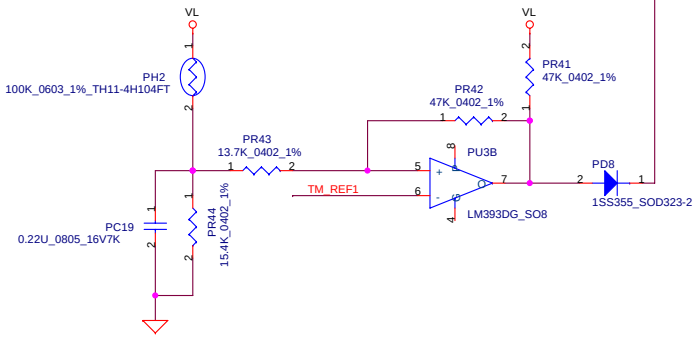

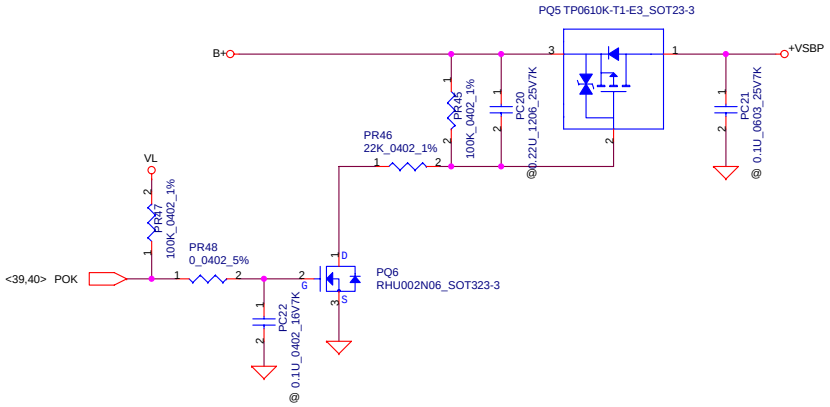

Security Classification	Compal Secret Data			Compal Electronics, Inc.
Issued Date	2007/5/4	Deciphered Date	2008/5/4	Title: BATTERY CONN / OTP
				Size / Document Number: IALAA-Minnesota10A LA3631P / Rev 1A
				Date: Monday, May 14, 2007 / Sheet 37 of 45

THIS SHEET OF ENGINEERING DRAWING IS THE PROPRIETARY PROPERTY OF COMPAL ELECTRONICS, INC. AND CONTAINS CONFIDENTIAL AND TRADE SECRET INFORMATION. THIS SHEET MAY NOT BE TRANSFERED FROM THE CUSTODY OF THE COMPETENT DIVISION OF R&D DEPARTMENT EXCEPT AS AUTHORIZED BY COMPAL ELECTRONICS, INC. NEITHER THIS SHEET NOR THE INFORMATION IT CONTAINS MAY BE USED BY OR DISCLOSED TO ANY THIRD PARTY WITHOUT PRIOR WRITTEN CONSENT OF COMPAL ELECTRONICS, INC.