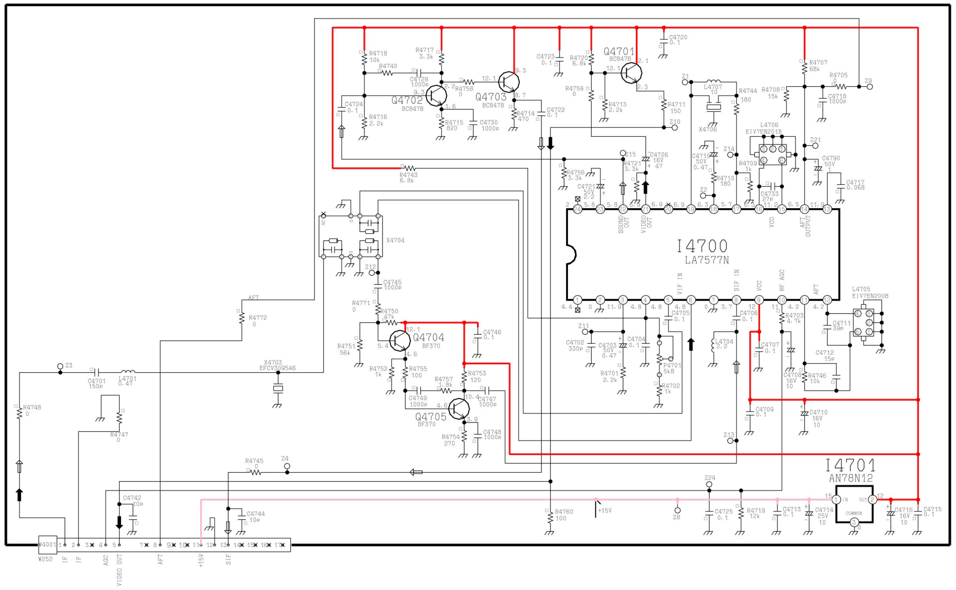
I4700
LA7577N
I4701
AN78N12
Q4701
Q4702
Q4703
Q4704
Q4705
X4704
VIDEO OUT
AGC
AFT
SIF