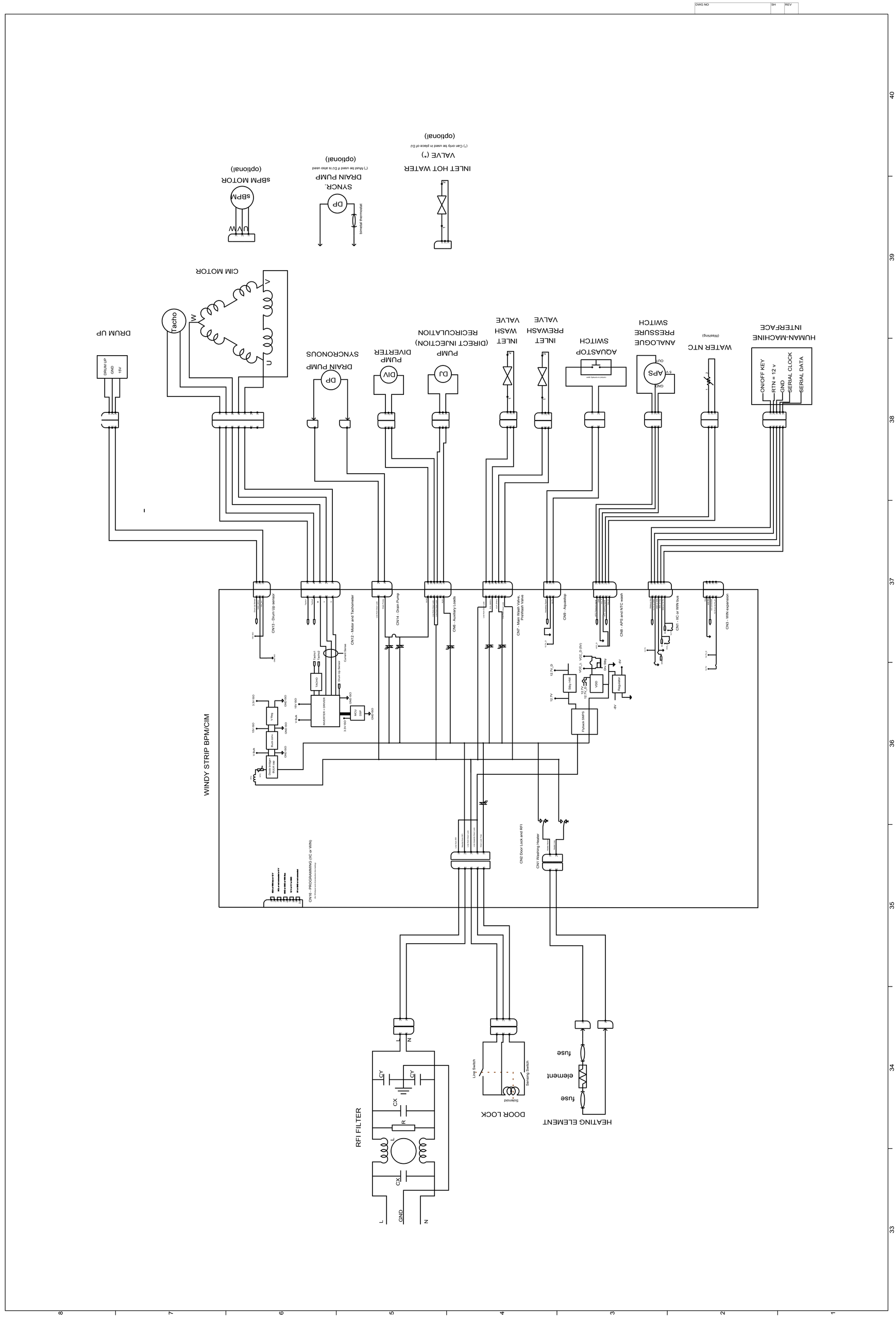
WINDY STRIP BPM/CIM
CN13 - Drum Up sensor
CN12 - Motor and Tachometer
CN14 - Drain Pump
CN5 - Auxiliary Loads
CN7 - Main Wash Valve
PreWash Valve
CN9 - Aquastop
CN8 - APS and NTC wash
CN1 - IC or WIN bus
CN3 - WIN expansion
CN16 - PROGRAMMING (IIC or WIN)
CN2 Door Lock and RFI
CN1 Washing Heater
INVERTER + DRIVER
Flyback SMPS
Stay HW
MCU
Regulator
Current Sense
Drain Up Sensor
Tachometer
Current Sensor
Dual-Bridge Rectifier
Pre-Filter
Y-Filter
DRUM UP
GND
15V
Tacho
M
U
V
W
CIM MOTOR
UVW
sBPM
sBPM MOTOR
(optional)
DP
SYNCR.
DRAIN PUMP
(optional)
bimetal thermostat
INLET HOT WATER
VALVE (*)
(*) Can only be used in place of DJ
(optional)
DRUM UP
DRAIN PUMP
SYNCRONOUS
DIV
PUMP
DIVERTER
DJ
PUMP
(DIRECT INJECTION)
RECIRCULATION
INLET
WASH
VALVE
INLET
PREWASH
VALVE
AQUASTOP
SWITCH
APS
5 V
GND
OUT
ANALOGUE
PRESSURE
SWITCH
WATER NTC
(Washing)
HUMAN-MACHINE
INTERFACE
ON/OFF KEY
RTN = 12 v
GND
SERIAL CLOCK
SERIAL DATA
RFI FILTER
L
GND
N
CY
CX
R
L
DOOR LOCK
Solenoid
Limp Switch
Sensing Switch
HEATING ELEMENT
fuse
element
fuse