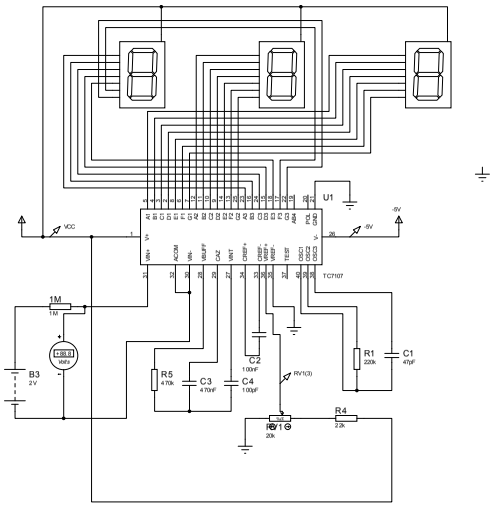
U1
TC7107
VCC
-5V
1M
1M
B3
2V
R5
470k
C3
470nF
C4
100pF
C2
100nF
RV1(3)
RV1
20k
R4
2.2k
R1
220k
C1
47pF